GUILD ◆ EDITION

Woodsmith®

Woodsmith.com

Vol. 37 / No. 219

INSIDE THIS ISSUE:

Router Joinery Made Easy

Super-Tune Your Table Saw

Tips & Tricks:
- Working with Plywood
- Super-Smooth Surfaces
- Bringing Out the Best in Your Tools

SMALL-SCALE HOBBY BENCH IS BIG ON FEATURES

A Publication of August Home Publishing

Woodsmith®

PUBLISHER Donald B. Peschke

EDITORIAL MEDIA DIRECTOR Bryan Nelson
MANAGING EDITOR Vincent Ancona
SENIOR EDITORS Wyatt Myers, Phil Huber, Randall A. Maxey
ASSISTANT EDITOR Robert Kemp

EXECUTIVE ART DIRECTOR Todd Lambirth
SENIOR ILLUSTRATORS Harlan V. Clark, Dirk Ver Steeg, Peter J. Larson
SENIOR GRAPHIC DESIGNER Bob Zimmerman
GRAPHIC DESIGNER Becky Kralicek

CREATIVE DIRECTOR Ted Kralicek
ASSISTANT DESIGN DIRECTOR Chris Fitch
PROJECT DESIGNER/BUILDER John Doyle
CAD SPECIALIST Steve Johnson
SHOP CRAFTSMAN Dana Myers

SENIOR PHOTOGRAPHERS Crayola England, Dennis Kennedy
ASSOCIATE STYLE DIRECTOR Rebecca Cunningham
SENIOR ELECTRONIC IMAGE SPECIALIST Allan Ruhnke
PRODUCTION ASSISTANT Minniette Johnson
VIDEO EDITOR/DIRECTOR Mark Hayes

Woodsmith® (ISSN 0164-4114) is published bimonthly by August Home Publishing Company, 2200 Grand Ave, Des Moines, IA 50312.
Woodsmith® is a registered trademark of August Home Publishing.
Copyright© 2015 August Home Publishing Company. All rights reserved.
Subscriptions: Single copy: $6.95.
Canadian Subscriptions: Canada Post Agreement No. 40038201. Send change of address information to PO Box 881, Station Main, Markham, ON L3P 8M6. Canada BN 84597 5473 RT
Periodicals Postage Paid at Des Moines, IA, and at additional offices.
Postmaster: Send change of address to *Woodsmith*, Box 37106, Boone, IA 50037-0106.

WoodsmithCustomerService.com

ONLINE SUBSCRIBER SERVICES

- **VIEW** your account information
- **RENEW** your subscription
- **CHECK** on a subscription payment
- **PAY** your bill
- **CHANGE** your mailing or e-mail address
- **VIEW/RENEW** your gift subscriptions
- **TELL US** if you've missed an issue

CUSTOMER SERVICE Phone: 800-333-5075 weekdays

SUBSCRIPTIONS
Customer Service
P.O. Box 842
Des Moines, IA 50304-9961
subscriptions@augusthome.com

EDITORIAL
Woodsmith Magazine
2200 Grand Avenue
Des Moines, IA 50312
woodsmith@woodsmith.com

AUGUST HOME PUBLISHING COMPANY

Printed in U.S.A.

from the editor

Sawdust

Storage projects are a popular topic around the office. We're always looking for ways to gain a little more control and keep things more organized, whether it's around the house or out in our shops. In this issue, you'll find solutions to organization and storage challenges in both of those areas.

Starting with the shop, you'll find a workbench (page 28) that provides workspace, storage, and organization in one compact package. The benchtop has a lot of room to work. Plus, it's easy to stay organized with the handy tool rack along the back of the bench. And you won't be disappointed with storage. Over a dozen drawers, and racks you can add to the ends of the bench, ensure a safe and secure place for all your hobby or craft materials and supplies.

Moving to the inside of the home, we have a couple of projects that take care of the storage challenges there. The first is a hall tree (page 16) that's key to organizing any foyer or mudroom — the two areas in a home that almost always seem to be cluttered. The hall tree features storage for coats, hats, umbrellas, and more, making it a must-have for any entrance.

My favorite project in this issue is the gentleman's dresser (page 38). The heavy-duty, solid-wood construction means it will be around for generations. The upper drawer and interior trays feature dovetail joinery for strength and great looks. And a series of adjustable shelves make it a snap to keep clothing and accessories within easy reach. But it's the design features that really catch your eye. From the classic quartersawn white oak to the grids in the frame and panel doors, it's a timeless style that would look right in just about any area of the home.

Finally, I don't want to forget the adjustable vise on page 24. Honestly, if you have a workbench, it's worth your time and effort to build this vise. A standard hitch ball allows you to rotate the vise along two axes. When you get everything right where you want it, a quick-release handle locks it in place. This adjustable vise isn't something you'll use every day, but when you need to secure a project part in just the right position to work on it, it's the perfect solution.

Besides these great projects, check out the rest of the issue where you'll find a wide range of articles covering tips, techniques, and tools that will ensure you get the most out of the time you spend in your shop.

Bryan

contents

No. 219 June/July 2015

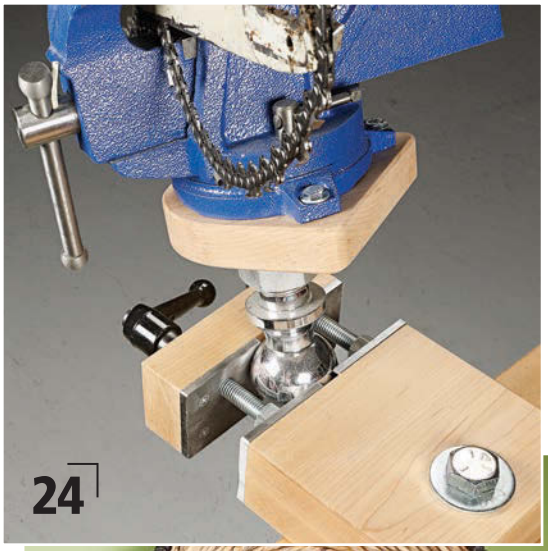

Projects

designer project

Elegant Hall Tree 16

Corral the clutter in your entryway with this stylish hall tree. Besides a variety of storage options, the adjustable mirror makes it easy to check your look on the way out the door.

weekend project

Multi-Function Swivel Vise 24

Being able to adjust the position of a workpiece or project as you work on it guarantees better results. This shop-built vise uses a ball hitch to make any adjustment quick and easy.

shop project

Hobby Workbench 28

Need a place to work on crafts and hobbies? This great-looking bench combines the right features of storage, tool accessiblity, and workspace to make any hobby more enjoyable.

heirloom project

Gentleman's Dresser 38

This Craftsman-style dresser is based on a classic design and features a lot of great woodworking. And once it's complete, you'll enjoy the much-needed storage it provides.

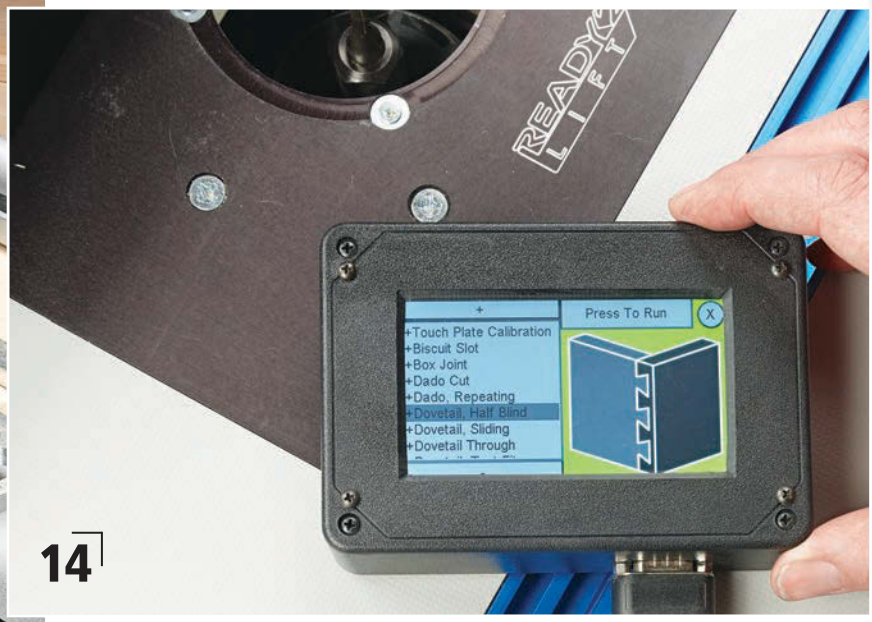

Departments

from our readers
Tips & Techniques 5

all about
Brushless Motor Tools 10

router workshop
Half-Blind Joinery Made Easy 12

great gear
The Digital Router Table 14

woodworking technique
Box Joint Tips & Tricks 50

working with tools
Super-Smooth Surfaces 52

in the shop
Keys to Cutting Diagrams 54

woodworking essentials
Working with Plywood 58

mastering the table saw
Super-Tune Your Saw 60

tips from our shop
Shop Notes 64

from our readers

Tips & Techniques

Dowel End Drilling Jig

It seemed like no matter how well I marked the centers of dowel ends, I could never get a perfectly centered hole. That all changed when I came up with the jig you see here. It not only holds the dowels in place for drilling, but it also has a built-in center-finder for marking the centers of the four most common sizes of dowels that I use.

SIMPLE CONSTRUCTION. The jig is made from a couple pieces of thick hardwood stock and two pieces of hardboard that function as a clamping surface. One note about constructing the center-finding block — drill the four shallow holes using Forstner bits. The tip of the Forstner bit leaves a small divot in the bottom of each hole. Use this divot to drill the through holes. The tips of the 1" screws should just protrude into the holes.

USE THE JIG. Simply press the end of the dowel into the matching size hole (inset photo). The screw marks the center. Then clamp the dowel into the V-groove (main photo) and drill the hole. The jig can also be used to drill cross holes in dowels by laying the jig on its side and clamping it down.

Gerald Welf
Fridley, MN

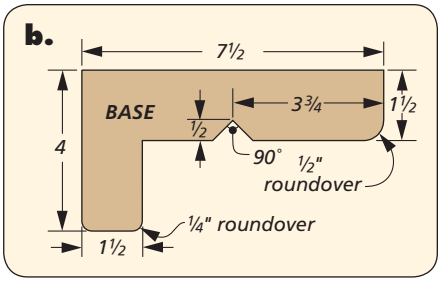

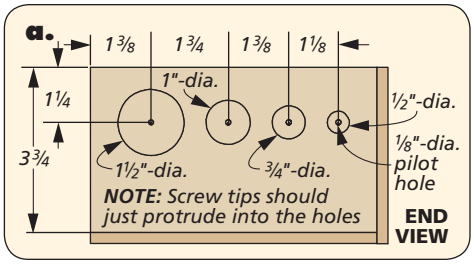

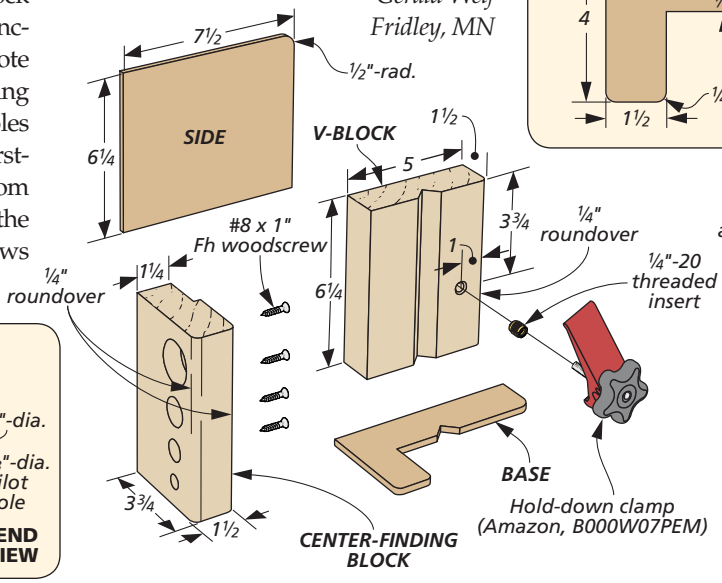

NOTE: *All parts assembled with glue*

NOTE: *Base and side are made from ¼" hardboard*

NOTE: *All holes in center-finding block are ⅝" deep*

NOTE: *Cut V-groove in V-block using the table saw*

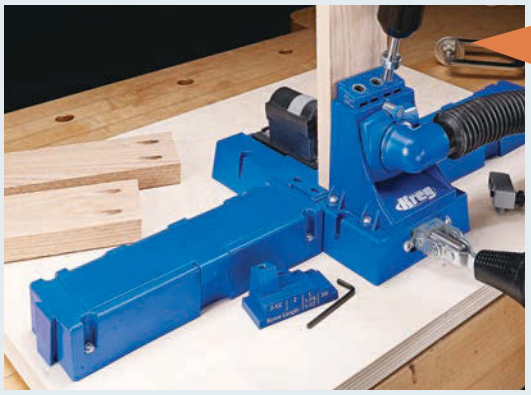

Win This Kreg K5 Jig

Simply send us your favorite shop tips. If your tip or technique is selected as the featured reader's tip, you'll win a *Kreg K5 Jig* just like the one shown here. To submit your tip or technique, just go online to *Woodsmith.com* and click on the link, "SUBMIT A TIP." There, you can submit your tip and upload your photos for consideration.

The Winner!

Congratulations to Joe Winston, the winner of this *Kreg K5 Jig*. To find out how you can win this jig, check out the information at left.

Small Parts Carousel

There's never a shortage of small parts and loose pieces of hardware cluttering my workbench. I needed a way to organize some of these items while still keeping them close at hand. My solution was to build this double-decker small parts carousel (photo at right). It's designed to hook into my pegboard, keeping my workbench tidy and ready to use.

CONVENIENT DESIGN. At the heart of the parts carousel are some 4" clear plastic jars with screw-on lids. These jars are available from *Lee Valley* (Sources, page 67) and are the perfect size for organizing a vast array of small items. The holes in the upper and lower discs on the carousel are sized to allow the jars to slip into place easily.

SIMPLE TO BUILD. With the exception of the hardwood dowel and the PVC spacers, the carousel parts are all made from plywood. I made the top, bottom, and back first. A shallow hole in the top and bottom holds the dowel, and a couple rabbets are needed at the ends of the back.

Next, cut the two discs to size and lay out the six holes for the jars, as well as the center hole for the axle. To ensure all seven of the holes align, clamp the discs together. One hole in the upper disc is notched (detail 'a') to make removing jars from the lower disc easier.

Soften the edges of the discs with a roundover bit and assemble the carousel. Screw the bottom to the back first. Then it's just a matter of stacking the rest of the pieces in place, as shown at right, before screwing the top to the back. A couple L-hooks allow the rack to hang on a pegboard panel.

Joe Winston
Temple, Texas

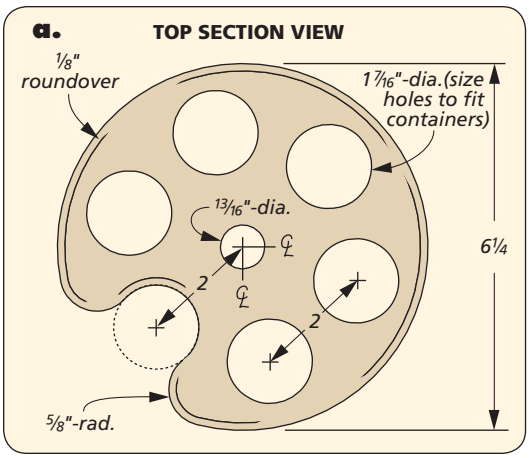

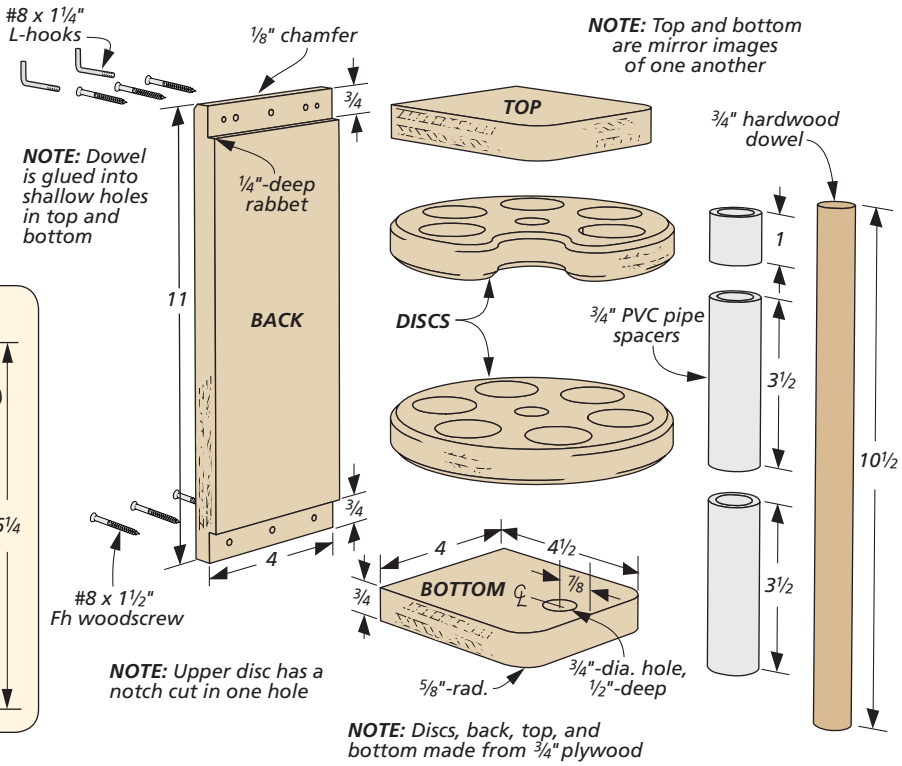

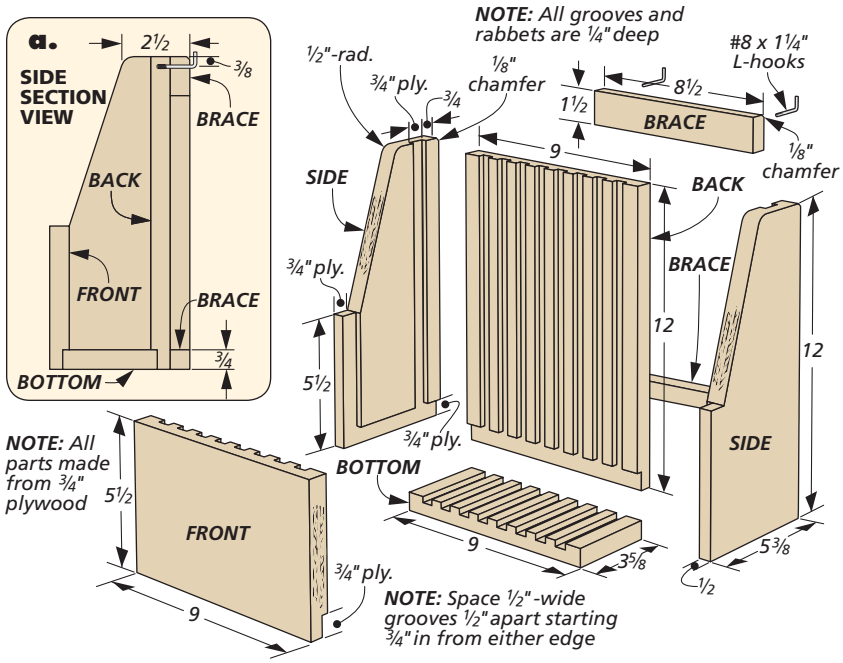

Table Saw Insert Caddy

Whenever I get a new blade for my table saw, I generally make (or buy) a new table saw insert so that I have a zero-clearance insert to match each blade. As you might imagine, I have accumulated quite the collection of table saw inserts over the years. In order to better organize the inserts, I made the handy caddy you see above.

PLYWOOD PROJECT. The front, bottom, and back have aligning grooves. I cut all of the grooves in one oversized piece and then cut the three parts to size. Cut ¾"-wide rabbets in the front, sides, and back before assembling the caddy with glue. For clearance to install on a pegboard panel, I chamfered the upper back edges.

Gary Ingber
Big Stone City, South Dakota

Roller Bars

When I work on bulky items like large drawers and cabinets, I like to be able to rotate the workpiece for easier access to all sides of the project. My solution was to build several of these "roller bars" using 360° roller bearings (Sources, page 67).

These bars are easy to make by attaching the roller bearings to a piece of "two-by" stock. A cleat fastened to one end of the bar butts against the edge of the workbench and helps to keep the bars aligned.

For smaller projects, a piece of plywood or MDF can be laid across a few roller bars and used as a platform, as shown above. If sized properly, the roller bars can also serve as table saw outfeed rollers.

Steve French
Lakeland, Florida

DIGITAL WOODSMITH

SUBMIT TIPS ONLINE

If you have an original shop tip, we would like to hear from you and consider publishing your tip in one or more of our publications. Jump online and go to:

Woodsmith.com
and click on the link,
"SUBMIT A TIP"

You'll be able to tell us all about your tip and upload your photos and drawings. You can also mail your tips to "Woodsmith Tips" at the editorial address shown on page 2. We will pay up to $200 if we publish your tip.

RECEIVE FREE ETIPS BY EMAIL

Now you can have the best time-saving secrets, solutions, and techniques sent directly to your email inbox. Just go to:

Woodsmith.com
and click on,
"Woodsmith Tips"

You'll receive one of our favorite tips by email each and every week.

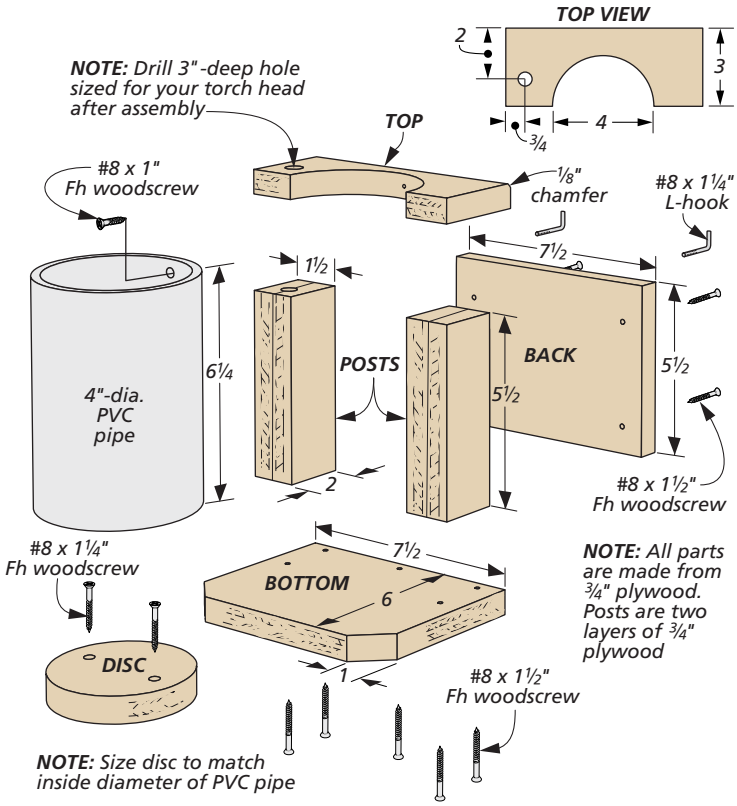

Propane Torch Storage Rack

I use my propane torch quite often for little projects around my shop. Instead of returning it to its plastic storage case every time after using it, I made this simple storage rack that keeps my propane cylinder and torch within arm's reach.

PVC CYLINDER. The most obvious choice for housing the propane cylinder was a section of PVC pipe that had a slightly larger inside diameter than the outside of my cylinder (4" pipe was just right). Then it was just a matter of making the rest of the storage rack from plywood.

THE BUILD. There's nothing too difficult about this storage rack. After cutting the PVC pipe to length, simply cut all of the plywood parts to size and assemble everything using glue and woodscrews.

Just a couple of points to mention: The half circle in the top is traced from the outside of the PVC pipe and cut on the bandsaw. The disc in the bottom of the pipe is traced from the inside of the pipe. A hole drilled through the top into the post provides a place to store the torch head. And a couple of L-hooks in the back allows the storage rack to hang on a pegboard panel, if you want.

Jay Jorgensen
Albany, New York

QUICK TIPS

File & Chisel Protectors. *Charles Mak* of *Calgary, Alberta,* didn't like his files and chisels rolling around and getting damaged in his workbench drawer. To keep them protected, he uses inexpensive pipe insulation. This insulation has a slit in the side and is easy to cut to length for each tool.

Glue Cup & Brush Keeper. To keep his glue brush off his workbench and at the ready, *Paul Pennock* of *Galena, Ohio,* made this simple glue station for his shop. It's simply a block of wood with a large hole near one end to hold a plastic cup and a groove to hold the glue brush.

Router Leveling Jig

I work with a lot of rough-sawn lumber and live-edged tree slices, like the one shown above. Unfortunately, my planer is usually either too small to handle such large pieces, or it would cause too much tearout on endgrain. To get around this problem, I built this router leveling jig out of plywood. I sized my jig to accommodate the largest lumber slabs and tree slices that I use, but it could be made larger to suit your needs.

GUIDES & SHIMS. The leveling jig is nothing more than two router guides consisting of a base and a fence. The router guides are attached at either end to a couple of shim stacks. The shim stacks have a solid top and bottom, but the shims in the middle of the stacks are slotted to allow them to be easily added or removed (detail 'a').

SIMPLE SETUP. To use the leveling jig, you'll need to place it, and the material being leveled, on a flat surface. My workbench works fine for this. If your material isn't heavy enough to stay in position, you may need to use a non-slip pad to keep it from sliding on the workbench.

SHIM IT UP. The leveling jig is set in position over the workpiece. I place an equal number of shims in each shim stack until the router guides just clear the highest point of my workpiece. The four knobs are then tightened down.

With a large bowl and tray bit in the router, make a light pass along the fence. After each pass, slide the shim stacks over by just less than the diameter of the router bit and make another pass. It may be necessary to lower the bit and make several passes to completely flatten the surface.

Jake Lee
Amery, Wisconsin

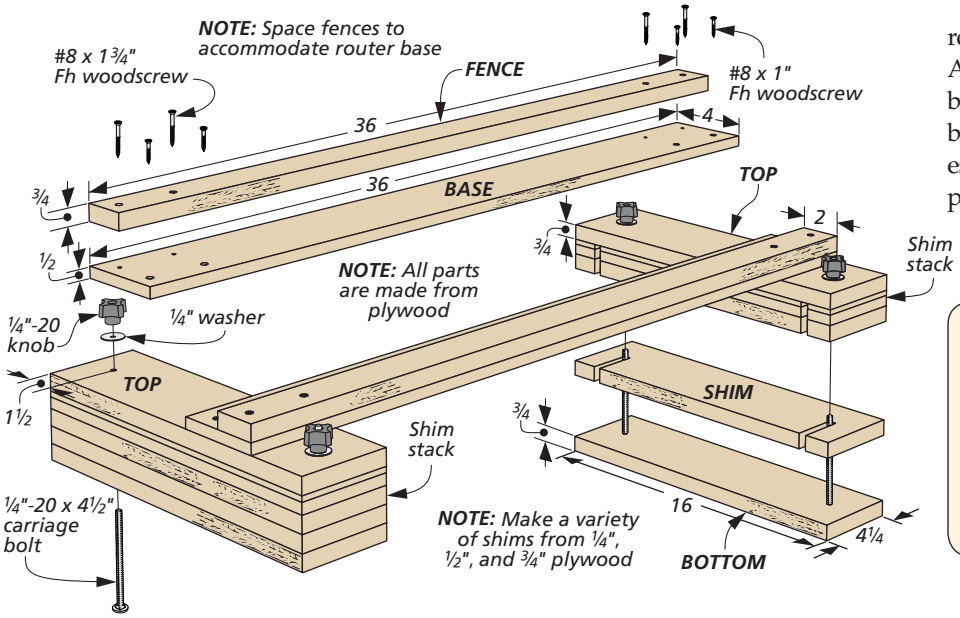

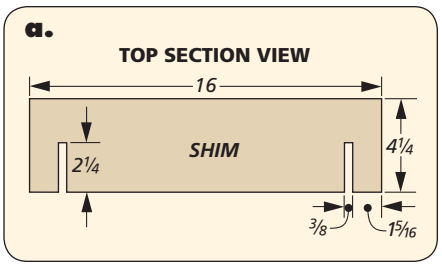

all about

what you need to know about Brushless Motors

When I'm working in the shop, I don't give much thought to what's happening inside my cordless power tools. But there's no question that a lot of advanced technology goes into these devices to make them work as well as they do. Just getting the motor to spin, for example, is a massive feat of industrial engineering.

Traditionally, cordless power tools have always used "brushed" DC motors. What are called brushes are not actually brushes in the traditional sense, but rather little blocks of carbon that transfer an electrical charge from the battery to the rotor, which is the spinning part of the motor.

Motors can also spin without using brushes, however, by using a form of "brushless" technology. This more advanced type of DC motor has been used in industrial settings for several decades. But now it's evolved to the point where it's making its way into common power tools like drills, impact drivers, and multi-tools (photos below).

The motors give the tools some clear-cut advantages over standard brushed power tools, but the technology also makes tools more expensive. I took a closer look to learn more about the tools.

HOW BRUSHLESS MOTORS WORK. In order to understand how they can help your woodworking, it's useful to have a basic understanding of the differences in how the two types of motors work. You'll find a basic overview in the drawings on the opposite page. All motors have a stator, which is the fixed, cylindrical housing

▼ Brushless motors can be found inside a wide range of handy, common portable power tools.

of the motor, and a rotor, which is the inner cylinder that spins. In a brushed DC motor, an electrical current flows through the brushes, which make contact with a smaller part attached to the rotor called a commutator. The commutator transfers the charge to the rotor, and then magnets on the stator react to this charge on the rotor and cause it to spin.

A brushless DC motor takes these basic concepts and turns them inside out. The stator has built-in windings that deliver the electrical current. And the rotor has magnets embedded in its outer housing. The charge delivered from the stator to the rotor is managed by a part called a controller, a compact, computer-like device.

PROS & CONS. Brushless motors provide a number of clear benefits over their brushed counterparts. The long-standing complaint about brushed motors is that the technology requires the brushes to always be in contact with the spinning commutator. This creates friction and drag, which in turn reduces tool performance. And over time, it wears the brushes down and leads to vibration. Eventually, you'll need to replace the brushes or the tool itself.

With a brushless motor, the stator does not contact the rotor. This means that there's no friction, no drag, and no brushes that will ultimately wear down and fail. This makes tools with brushless motors more efficient, run longer, and deliver more power in a similarly sized package. They also run smoother with less noise and vibration. What's more, brushless motors can actually be more compact than brushed motors since they have fewer parts.

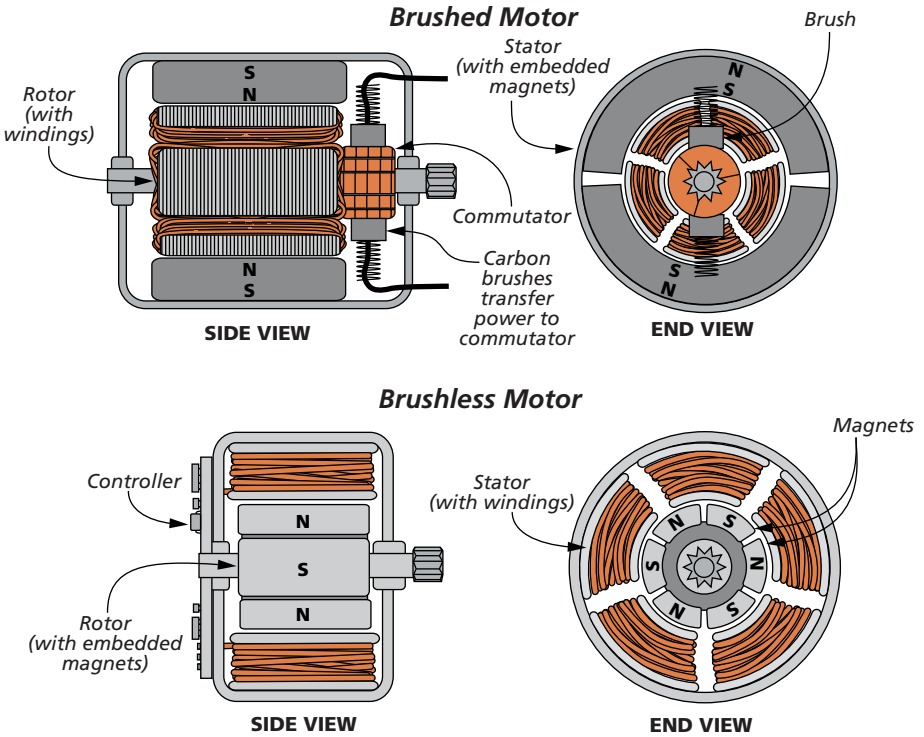

Brushed motors also run at the full charge delivered to the brush, regardless of the operation. Whether you're driving small screws into pine or drilling large holes in mahogany, the drill is running at the same power.

The tiny computer, or controller, that regulates the current of a brushless motor can adjust the power delivered to the tool based on the task at hand. This further adds to the tool's efficiency in use.

If there's any drawback to brushless motors in tools, it's the cost. Though the technology is improving and the cost is decreasing, brushless tools are still on average about 30% more expensive than comparable brushed tools. As just one example, the two-tool brushless *DeWalt* kit shown on the opposite page is $260 as shown, but just $200 when the tools have brushed motors instead.

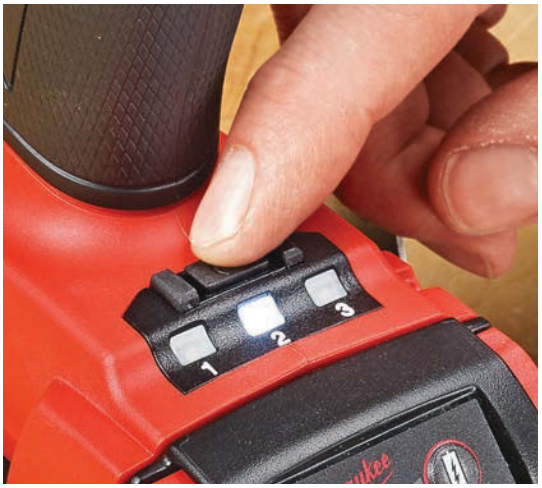

▲ Tools with brushless motors usually have lithium-ion batteries and other special features, like the push-button speed control on the *Milwaukee* impact driver.

AVAILABLE TOOLS. Even that increased price, however, may change in the years ahead as more tool manufacturers embrace the technology. Today, brushless tools are available from *DeWalt*, *Milwaukee*, *Rockwell*, *Makita*, *Bosch*, and a few others. Thus far, brushless motors are typically used in tools with a fairly constant load and consistent RPM. This includes tools such as drill/drivers, hammer drills, impact drivers, and oscillating multi-tools. Most saws and routers have too much variability in load and torque demands to incorporate brushless motors with the current technology.

Since brushless tools are usually part of a manufacturer's premium line of tools, they typically have other upgraded features, as well. For example, the drill/driver from *Milwaukee* has a ½" instead of a ⅜" chuck. Other tools showcase push-button impact or speed settings (photo, left). As with most new cordless tools these days, they feature lithium-ion batteries for the longest runtime possible.

THE RIGHT TOOL FOR YOU. In theory, brushless tools certainly seem to have an edge over their brushed counterparts, both in performance and longevity. In use in my shop, the tools worked very well, but they didn't seem hugely different from their newer brushed counterparts for the type of work I do. I think where the advantages really lie is for tradesmen who put a lot of wear and tear on their tools all day, every day.

Whether the tools are worth the higher price tag for you and your shop is ultimately a personal decision. Either way, DC brushless motors are certainly technology that is here to stay and worth keeping an eye on in the future. W

routing rabbeted Half-Blind Dovetails

Many woodworkers purchase a half-blind dovetail jig to create drawer joints quickly and accurately. However, these jigs can do more than basic drawers. One example is an overlay drawer with a rabbeted drawer front (left photo).

In our recent dining room suite series, we used this joint for the drawers in the hutch (No. 217) and buffet (No. 218). This design eliminates the need for a separate false front applied to the drawer.

Any half-blind dovetail jig can be set to cut these joints following the approach shown here.

◄ You can rout joints like these using a typical half-blind dovetail jig.

So if you're familiar with how the jig works, you're well on the way to mastering this technique.

Using a jig to make rabbeted half-blind joints works about the same as making a typical drawer — with a few differences. The proces has three steps: creating the rear joints, cutting the tails at the front of the sides, and cutting the pins in the drawer front.

FIRST THINGS FIRST. Before you start up your router, there's one important step you need to take. And that's to cut the rabbets around the edges of the drawer front. You'll use these as a gauge for setting up the dovetail jig. For the dining room suite, the top and bottom edges receive a ⅜"-wide rabbet while the ends have a ¾"-wide rabbet. The depths are the same (⅜").

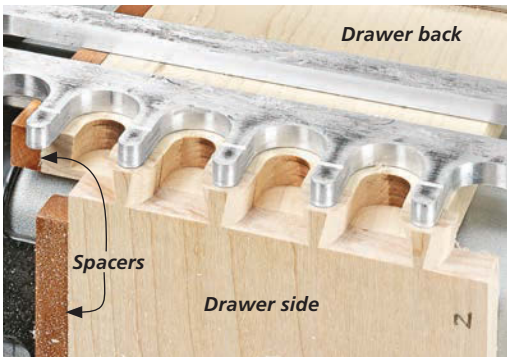

▲ The half-blind joints at the back of the drawer are routed as you normally would. The only difference is the addition of a pair of spacers.

ROUT THE REAR JOINTS. I started with the dovetails at the rear of the drawer since they're the most straightforward. The drawer sides and back aren't rabbeted, so both parts can be cut at the same time, just like a typical half-blind joint.

Now my goal is to have the dovetails arranged symmetrically on all the parts. To accomplish this without having to reset the jig for each set of joints, I took into account the rabbet on the drawer front right off the bat.

Here's the first difference. I cut a pair of spacers that match the width of the rabbet on the top and bottom edge of the drawer front. These are placed between the jig stops and the drawer sides and back, as shown in the near right photo.

With the spacers taped to the drawer sides, I adjusted the side stop on the jig so that the drawer parts were centered for even tail spacing. On a side note, because the dovetail layout is symmetrical, I set up the jig to rout all the joints from one side (left) of the jig.

At this point, it's a good idea to use test pieces to dial in the bit and jig settings for a set of dovetails with a nice fit. When that's done, rout the dovetails for the two rear corner joints of the drawer.

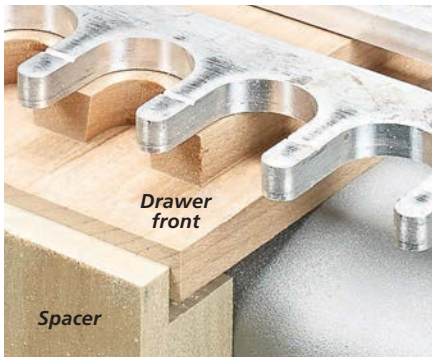

▲ The vertical spacer has a notch to offset the drawer front to account for the rabbet on the end of the drawer.

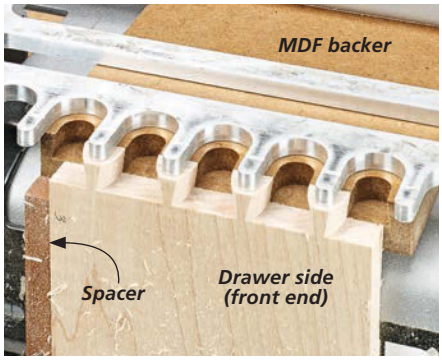

▲ A piece of MDF clamped in the jig behind the drawer sides prevents the bit from causing chipout as it exits the cut.

ROUT THE FRONT TAILS. You can turn your attention to the joints at the front of the drawer. Because the drawer front has a rabbet, it's not possible to rout both parts of the joint at the same time. Instead, you tackle each part one at a time.

The tails routed into the drawer sides are created using the same setup as the rear joints — with a spacer. The key difference is placing an MDF backer behind the drawer side to prevent tearout, as shown in the upper right photo.

ROUT THE FRONT PINS. The final part of the dovetail joinery is creating the pins in the rabbeted drawer front. Since the side stops on the jig were set with this rabbet in mind, there isn't anything to worry about here. You can set the drawer front snug against the stop (without a spacer).

What does need some adjustment is the front-to-back position of the drawer front in relation to the jig template. You need to account for the width of the rabbet on each end of the drawer.

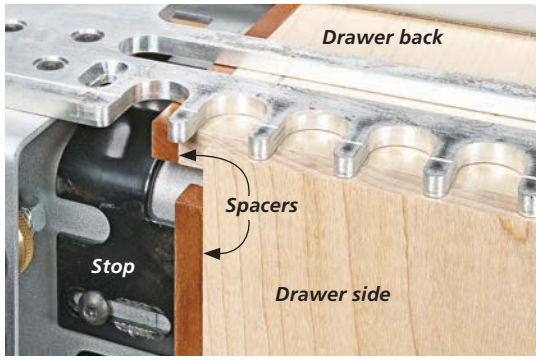

▲ The spacers are sized to match the width of the rabbet along the top and bottom edge of the drawer front.

Here again, the solution I chose is a spacer, as shown in the left photo. This larger spacer has a notch cut on the end to act as a stop. The depth of the notch matches the width of the rabbet on the end of the drawer front. With the block clamped in the vertical position on the jig, you can slide the drawer front into place and butt the end of the drawer front into the notch on the spacer.

Routing the sockets to create the pins doesn't require any sort of backup. So you're all set to rout the pins.

That wraps up the joinery for the drawer. However, there are a couple of other details left to take care of before the drawer is ready to be glued together. The box below highlights the steps.

It's surprising how a few spacers and a little know-how can expand the capabilities of a simple half-blind dovetail jig. And this technique shows why it's such a handy accessory to have in your shop. W

How-To: FINISHING UP

▲ Align the groove for the drawer bottom with a tail on the side so that the groove won't be visible after assembly.

▲ To create the profile on the drawer front, I only used a portion of a ½" roundover bit in the router table.

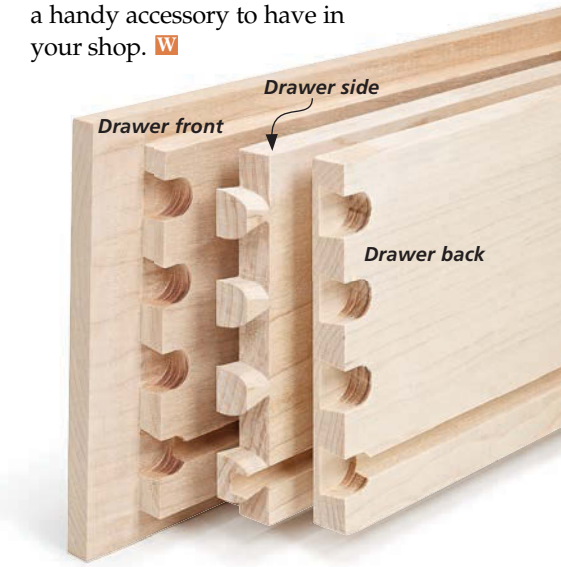

▲ The rabbets on the drawer front (left piece) determine the setup for routing half-blind dovetails in the other parts.

computerized routing with Ready2Rout

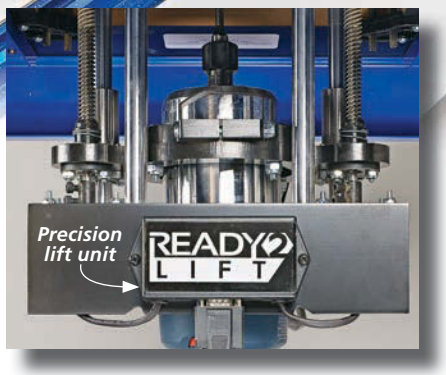

Using computers to control tools (like a CNC router) is nothing new. One company is using computer-controlled motors to automate one of the most often-used tools in the shop — a router table. *NextWave Automation* manufactures CNC machines, but they also developed a system to control the fence position and bit height on a router table.

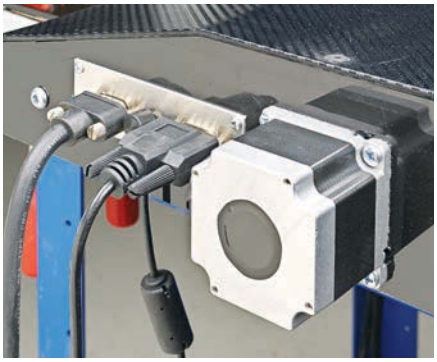

▲ The *Ready2Rout* fence system features a motor to move the fence plus connections for the control module and *Ready2Lift*.

TWO COMPONENTS. The system is made up of the *Ready2Rout* fence and *Ready2Lift* router lift, as you can see in the photos above. While you can buy each part separately (refer to Sources, page 67), they're designed to work as a system.

WHAT IT DOES. The *Ready2Rout* system automates repetitive tasks at the router table. For example, it excels at cutting joinery like box and dovetail joints. But you can also fine-tune the fence position and bit height in increments as small as 0.01" using decimal inches, millimeters, or fractional inches. (Internally, the system is accurate to 0.001".)

SETUP. The instructions that come with the system are pretty thorough. The most time-consuming part of the setup was installing the router in the lift, but it only took about a half hour. You have your choice of two router plates that should fit most router tables.

Attaching the fence system to the table is as simple as clamping or bolting the mounting tabs in place. But before you can use the system, the fence needs to be checked to make sure it's square to the tabletop. I had to place a few shims under the mounting plates.

MAKING CONNECTIONS. The system comes with a small controller box with a touch screen. You can see it in the photo above. Both the controller and the lift plug into the back of the *Ready2Rout* fence, as shown in the photo at left.

With everything connected, plug in the controller's power cord. After you get past the intro screens, you can enter some critical information. One piece of

▲ Plug the zero plate into the controller to set the fence and bit zero positions before turning on the router and running apps.

▲ The included magnet attaches to the router bit to complete the circuit when the bit touches the aluminum zero plate.

▲ When running the app to zero the bit, the bit raises automatically until it touches the zero plate.

data you'll need is the bit diameter. The system calculates all of its movements for routing based on this measurement.

The next task is to zero the fence and bit. This procedure is shown in the photos above and at right. Doing this gives the system a point of reference for positioning the fence and setting the bit height. You'll need to do this operation every time you install a bit.

CHOOSING AN APP. If you own a smartphone, you're already familiar with apps. They're software programs that provide instructions to the computer. In this case, the apps allow you to make a variety of joints and decorative cuts (box below). When you purchase the entire system, you receive a broad selection of apps already installed.

Once you choose an app, the controller provides step-by-step instructions on how to proceed. It will automatically move the fence and change the bit height as needed. In the case of the box joint I'm cutting in the main photo, the fence and bit move to rout the first notch. The system then prompts you to press "OK" after each cut. The fence moves away from the bit the correct distance to cut the second notch. I had already input the width and thickness of the workpiece in the system, so it knows how many times to make a cut to complete the joint.

There's another app to cut the mating joinery for the box joint. After you've cut one side of the joint, substitute the mating piece and run that app. It's that simple.

Note: When holding a workpiece upright for routing, I prefer to use a sled. You can purchase the one shown in the main photo as an optional accessory.

EVERYDAY ROUTING. If you create a lot of repetitive joinery or decorative cuts like fluting, the *Ready2Rout* system is a perfect solution. But it's great for everyday routing tasks like moldings, edge profiles, and other joinery.

First of all, it can save and recall fence and bit height positions. That's a great option if you have to go back and make a cut after moving the fence.

Since *Ready2Rout* can move the bit and fence in increments as fine 0.001", this eliminates a lot of the guesswork and trial-and-error method on setting the fence position or bit height.

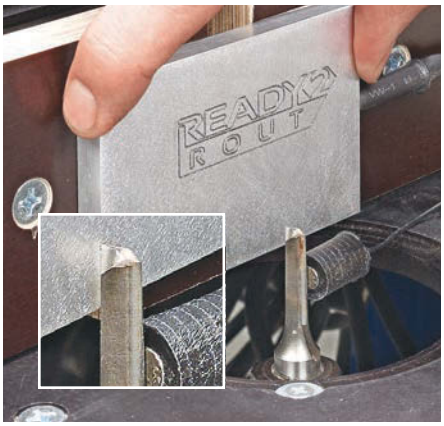

▲ Set the zero position for the fence using a similar process. This time, the zero plate rides with the fence until it touches the bit.

The downside to the *Ready2Rout* system is the cost. It's just under $1,000 for the fence, lift, and controller. But if you do a lot of routing, it sure does eliminate a lot of frustration in setting up the fence and bit height for making a cut. And the repeatable accuracy you can achieve is sure to justify the expense. W

How-To: SOFTWARE APPS & UPDATES

As I mentioned, the *Ready2Rout* system comes preloaded with a few apps. You can purchase additional apps to add new functions for the *Ready2Rout*. They're available on the *NextWave Automation* web site. The company says they'll develop new apps based on customer requests. You can also download updates to the controller software.

Installing or updating software on the *Ready2Rout* controller is pretty straightforward. After downloading the software from the web site, copy it onto a USB flash drive (right photo). The instruction manual tells you how to plug in the flash drive to copy and install the files from there onto the controller. After restarting the controller, the new software is installed and ready to use.

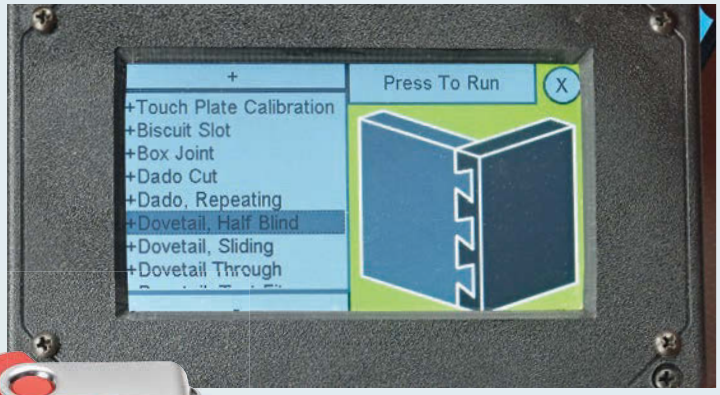

▲ *Ready2Rout* comes with a selection of apps. You can download additional apps and updates and then install them with a flash drive.

Designer Project

Entryway Hall Tree

This stylish project is the perfect storage solution for any hall or entryway. You'll find places to stash your umbrellas, coats, and more.

Let's face it: The home's entryway tends to be a magnet for all kinds of clutter. Shoes, umbrellas, hats, and coats get dropped and picked up in this area constantly. And if you don't have a good method for organizing these items, it can quickly turn into an unsightly mess.

The elegant hall tree you see here is a great solution to this problem. With a set of hooks, shelves, and a bottom bin for storing umbrellas, it's the perfect spot to deposit or collect these items when you arrive at the entry door. It even has a pivoting mirror for a quick check before you head out the door.

ANGLED DESIGN. The unique look centers around the compound-beveled legs, which angle inward from the bottom of the hall tree toward the top. This lightens the look of the hall tree and makes for a more pleasing design.

To simplify the construction process, I eliminated any tricky joinery and instead relied on dowels, corner blocks, and screws to bring everything together. Of course, the angled design of the tree presents a few interesting challenges, but you'll find all the information you need on the following pages. The end result is a project that's fun to build and is sure to add some useful storage to your home.

Construction Overview / OVERALL DIMENSIONS: 16 9/16"W x 68"H x 16 9/16"D

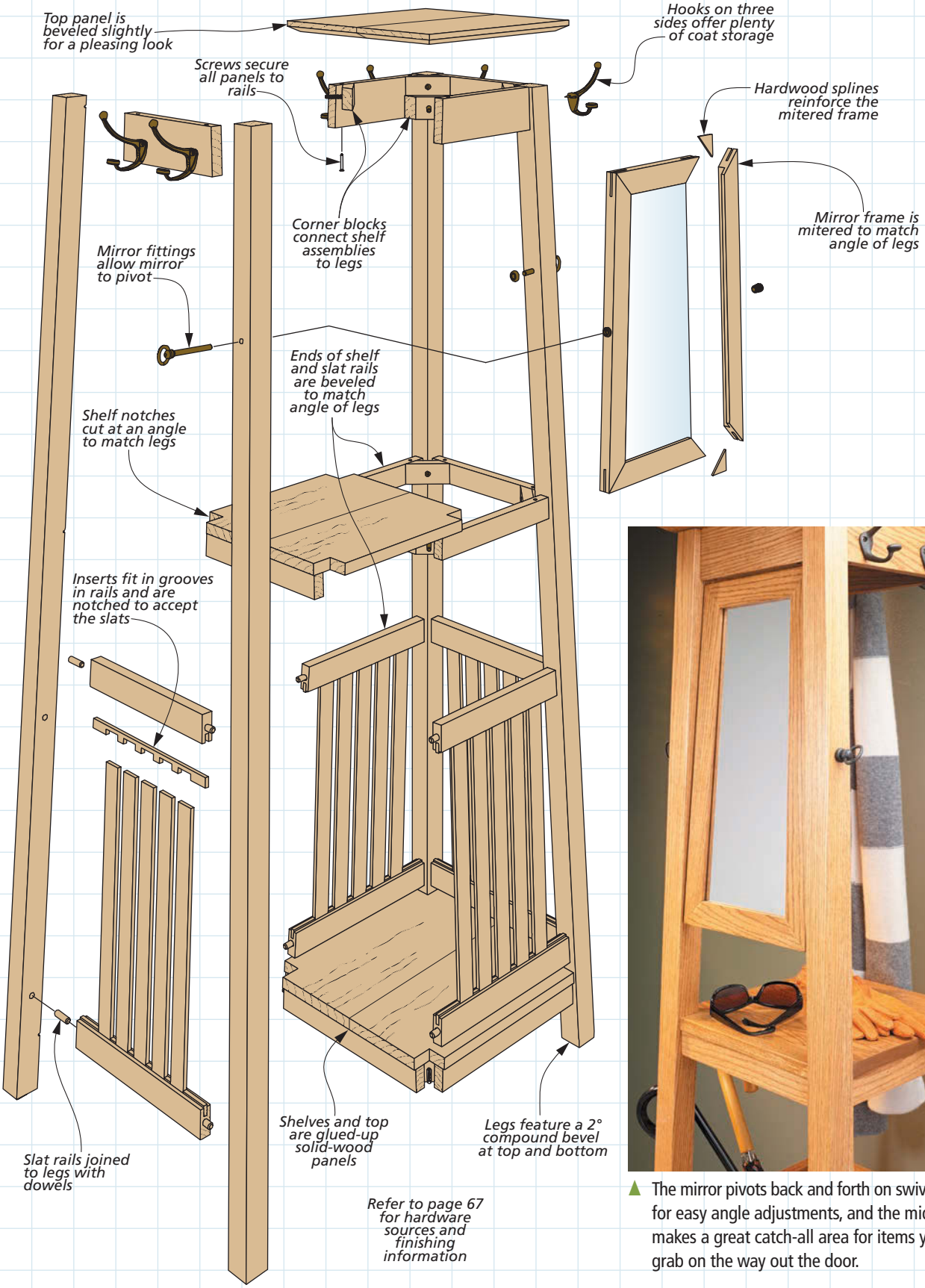

Refer to page 67 for hardware sources and finishing information

▲ The mirror pivots back and forth on swivel hardware for easy angle adjustments, and the middle shelf makes a great catch-all area for items you need to grab on the way out the door.

Start with legs & SHELVES

The legs are a good place to start on the hall tree. They're made from 8/4 oak that's jointed and planed to thickness and width.

In the completed hall tree, the legs have 2° compound bevels on the ends. This allows them to tilt inward, as shown at right. I recommend labeling the inside- and outside-facing corners of each leg. Also mark the "front" legs (for the mirror) and back legs for clarity.

COMPOUND BEVELS. The easiest way to cut the compound bevel on the table saw is to make a "cradle" with a V-groove in it to hold the leg at an angle (drawing, below left). This way, you can tilt the blade 2° and pass the bottom end over the blade.

With the bottom trimmed at 2°, measure along the edge of the leg and mark the location for mitering the top end. You can make this cut with the same table saw setup by flipping the leg end for end. Now use the first leg to lay out the cuts on the other three legs and repeat the process.

DRILL HOLES. The next steps involve drilling a series of holes in each leg. There are three holes on the inside-facing corner to accept screws that secure the shelves. And two holes on the two inside faces of each leg hold dowels for the slat rails.

As detailed in the drawings above, the dimensions for laying out the holes follow the 2° angle of the leg. This makes layout fairly simple, as you just align a tape measure with the bottom or top of the leg, set it parallel with the edge, and then measure and mark the hole locations.

The holes need to be parallel with the floor to make it easier to assemble the hall tree. That requires guides with 2° faces to drill the holes. You can see the guides in action in the lower right drawings. The details for building them are found on page 65. (You'll need to extend your hole layout lines around the legs to use the jigs. Use a protractor or bevel gauge for this.)

The final holes to drill in the front two legs accept the mirror fitting hardware.

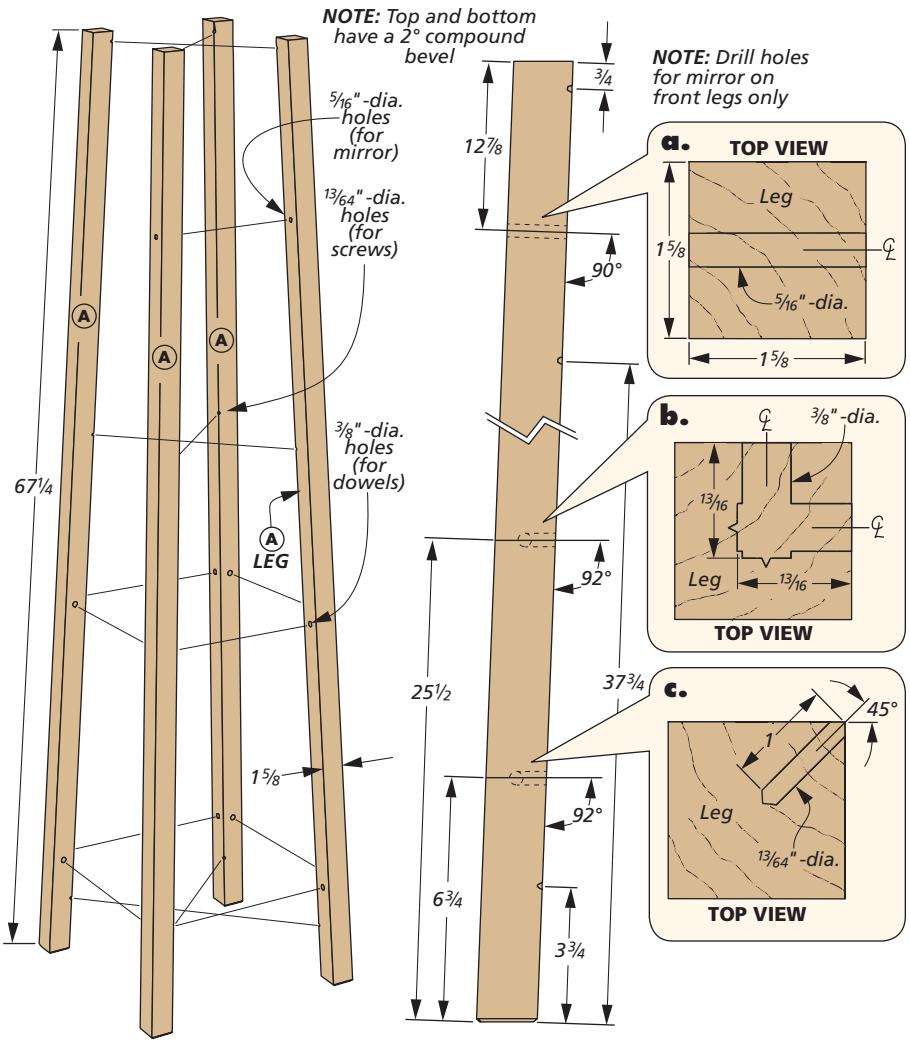

How-To: MAKE THE LEGS

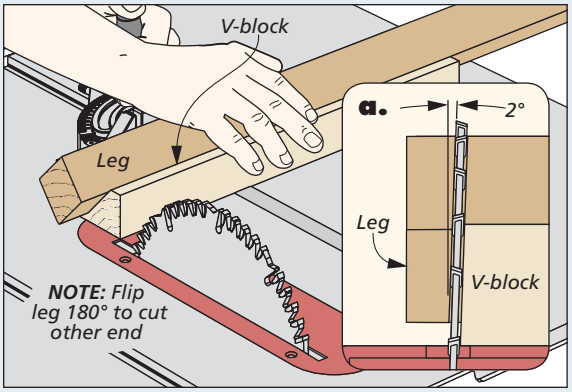

Miter Legs. Set a block with a V-groove against the miter gauge, tilt the blade 2°, and bevel the end of the leg. Flip it 180° to bevel the other end.

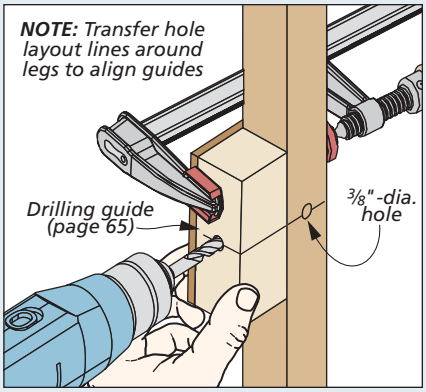

Drill for Dowels. Use a brad point bit and this custom guide to drill holes for dowels in the legs.

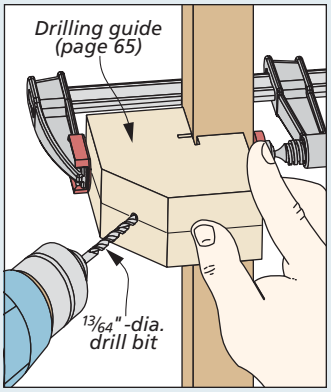

Screw Holes. This corner drilling guide lets you make holes on the inside corners.

The mirror only needs to pivot a few inches back and forth, so these holes are perpendicular to the leg faces. I just drilled them at 90° at the drill press.

SHELVES. The shelves are glued-up panels supported by four rails (drawings, right). The rails align with the notches at the corners of the shelves, and they all feature 88° bevels to match the angle of the legs (detail 'b'). Corner blocks fastened to the rails allow you to screw the shelves to the legs.

To make the shelves, start by gluing up panels for the lower and middle shelf. Then cut them to overall final size. Next, cut the rails slightly oversize in length, and screw them to the shelves (Figure 1 below). Note that they're set in slightly from the edge of the shelves (detail 'c').

ANGLED CORNERS. With the rails attached, you can cut the notches in the corners of the shelves. I did this at the table saw as shown in the two drawings, below right. A couple of notes about this setup: For one, you want to make all your cuts with the top of the shelf facing forward. In order for this to work, you need to cut one shoulder of each notch using the left miter slot (Figure 2), and the other shoulder of each notch using the right miter slot (Figure 3).

I also positioned a stop block for each setup. This way, I could simply rotate the shelf after each cut to make the next cut. Since the two shelves are different sizes, you'll need to reposition the stop block for making the cuts on the different shelves.

CORNER BLOCKS. The corner blocks are the next order of business. After you cut them to size, you can drill a hole in the center of each block and miter the corners at 45°. Then glue and clamp them in place to the underside of the shelves (detail 'c'). The shelves don't get installed just yet, so they can be set to the side for now.

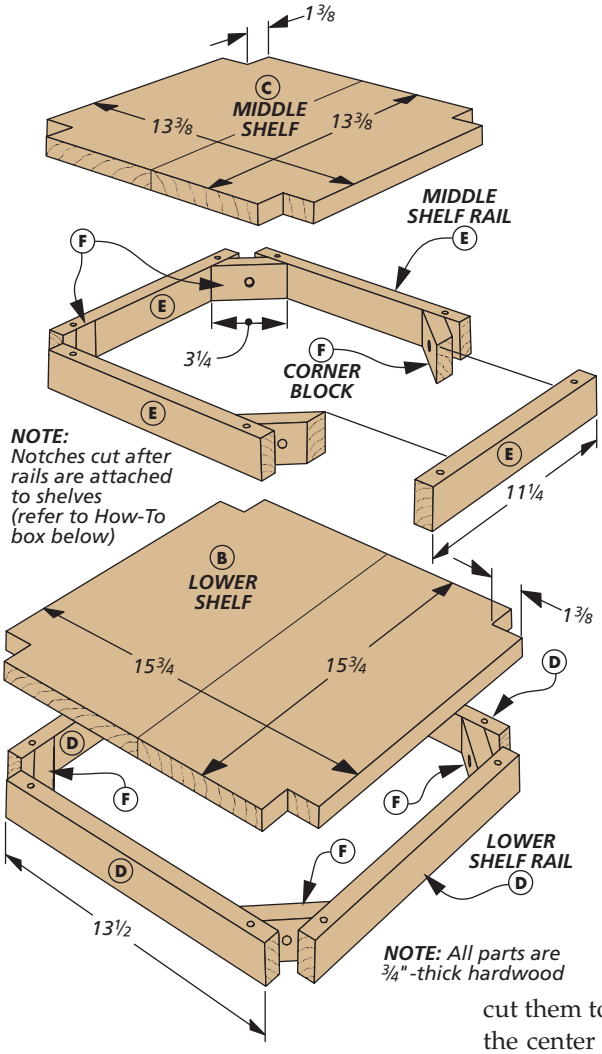

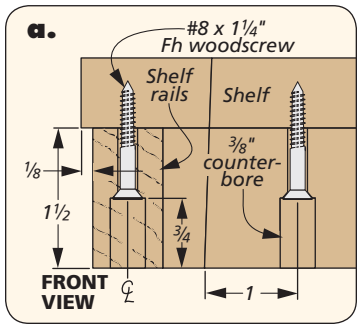

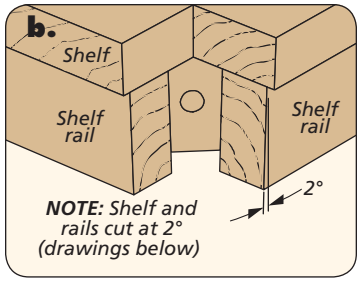

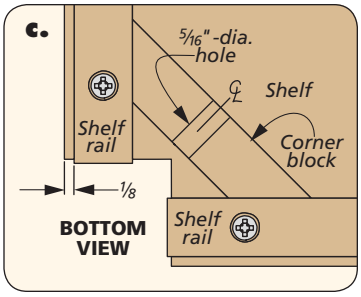

How-To: BUILD THE SHELVES

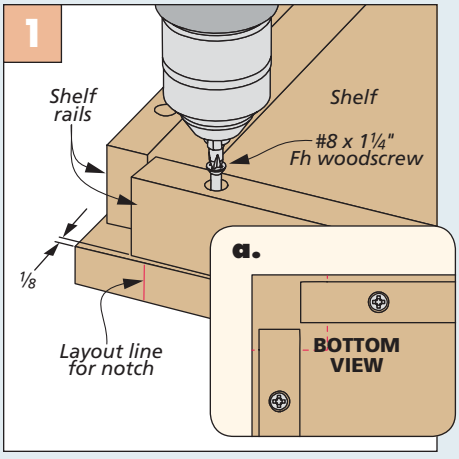

Attach Rails. Leave the rails extra-long, and screw them to the underside of the shelf using woodscrews.

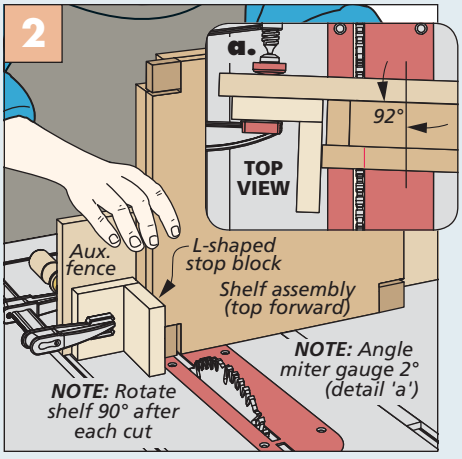

First Cut. To cut one shoulder of each notch, hold the shelf on a tall fence, and angle the miter gauge 2° before cutting.

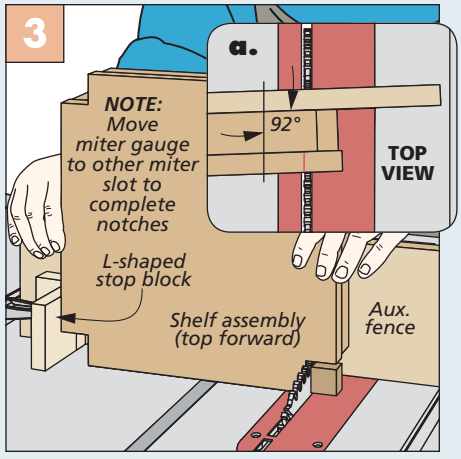

Second Cut. Move the miter gauge to the right miter slot. Angle it 2° in the other direction to complete each notch.

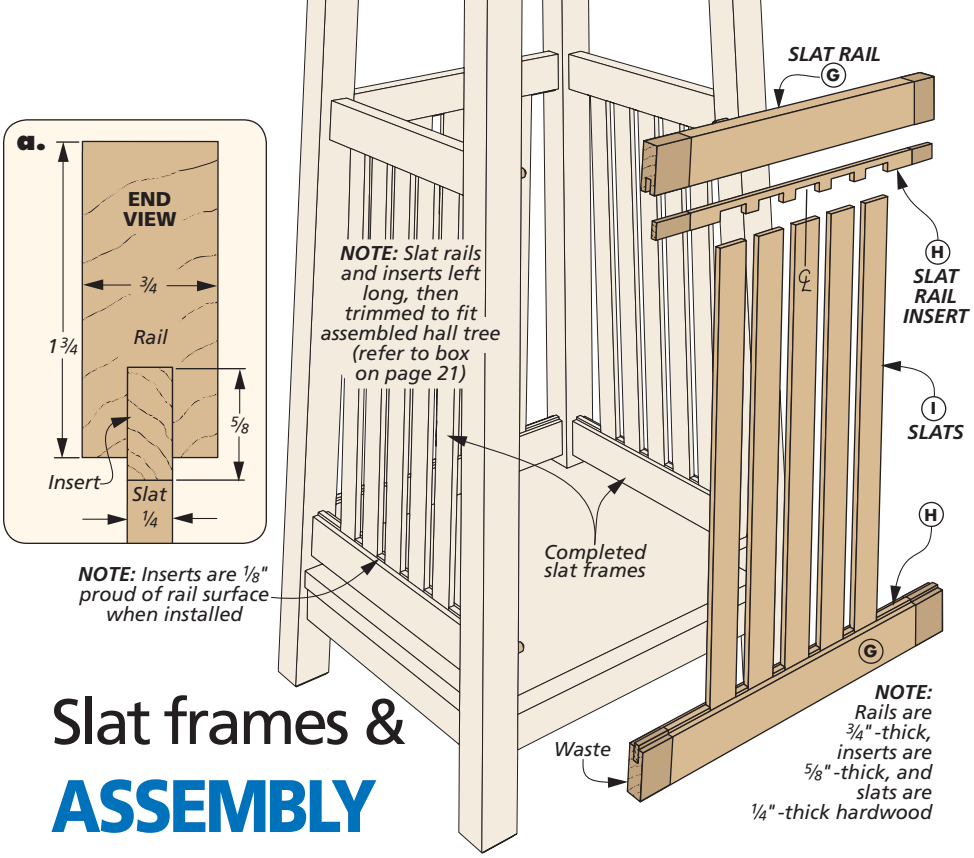

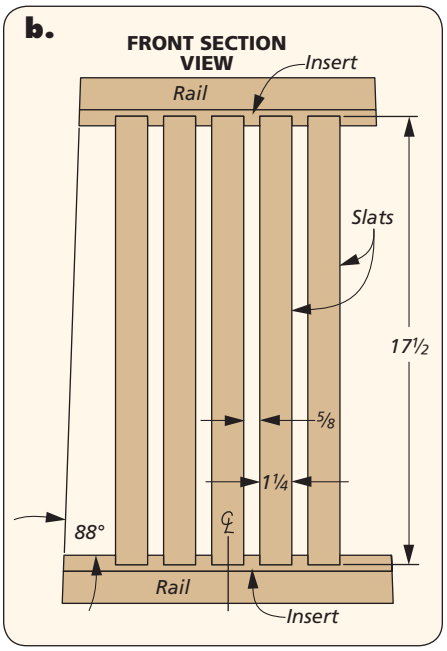

Slat frames & ASSEMBLY

The bottom part of the hall tree is enclosed by four frames. These consist of upper and lower rails that sandwich five slats. Once the frames are added to the hall tree, they form a bin for umbrellas, walking sticks, or other items.

SLAT RAILS. The slat rails are joined to the legs with dowels. Of course, getting dowel holes to line up can be tricky, even when you're not dealing with angled parts. So I incorporated some tips into the construction process to make sure everything goes together smoothly.

Since the shelves are already complete, the length of the slat rails is dependent on the space between the legs when the shelves are added. The key is to temporarily screw the shelves to the legs in order to determine the length of the rails (more on that later). For now, you can size the rails to final thickness and width and leave them extra-long. You'll trim them to length later.

GROOVES. Rather than cut a lot of mortises in the rails to hold the slats, I created notched slat inserts. These inserts fit in grooves cut in the edges of the slat rails. So the next step is to cut centered grooves in the rails (Figure 1 below).

SLAT INSERTS. Next, I turned my attention to the slat inserts. As mentioned earlier, these have notches to accept the slats. To simplify making them, I notched a wide blank (Figure 2) then ripped individual inserts from the blank to fit the groove (Figure 3).

There are a couple other things I want to point out here. Since the inserts fit in the rails, they're trimmed down to final length later on like the rails. For now, start with an insert blank that's the same length as the rail blanks.

How-To: MAKE THE SLAT RAILS

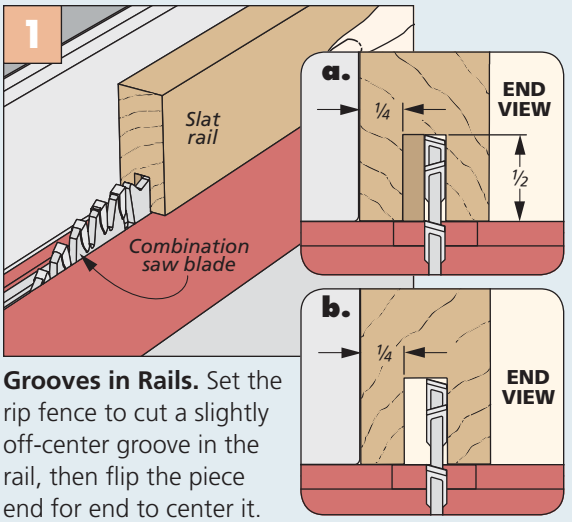

Grooves in Rails. Set the rip fence to cut a slightly off-center groove in the rail, then flip the piece end for end to center it.

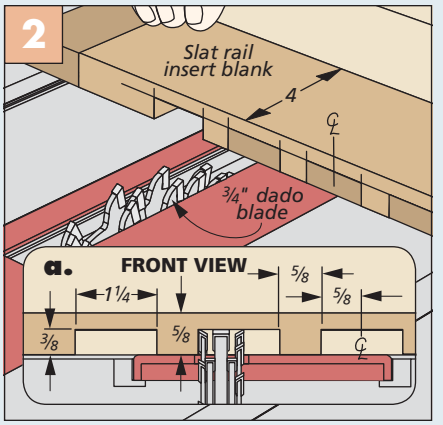

Notch Inserts. Start with a wide and long blank for the slat inserts, and cut the five notches using a dado blade.

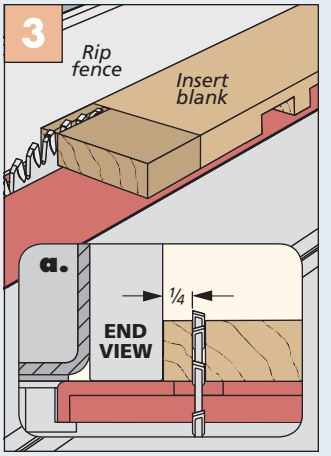

Rip Cut. Trim the individual slat inserts to final width at the table saw.

Also, the slats need to be centered in the rails once each assembly is completed. To accomplish this, I simply centered the notches on the blank. Since cutting each notch requires two passes over the dado blade, I just laid them out carefully before cutting them. After ripping them to width, you can glue them into the grooves in the rails. As for the slats, they're planed to thickness to fit the grooves. Then cut them to final size.

SIZING THE SLAT RAILS. The next steps involve sizing the slat rails to fit your hall tree assembly. Get started by dry-fitting the slat frames together, and then secure each frame with a band clamp. At this point, I temporarily assembled the legs and shelves with the screws.

Next, position one of the slat frames under the hall tree, as shown in Figure 1. The key here is that the slat rails are parallel with the shelves, and the middle slat is centered. Once it's all set up, there are two things to do: Mark the ends of the rails to indicate their finished length, and transfer the dowel hole locations from the legs to the rails (Figure 2). Now rotate the hall tree and repeat the layout process for the other three frames.

You're ready to complete the work on the slat frames. Disassemble each one, and bevel the rails (and inserts) to final length (Figure 3). To drill the dowel holes in the ends of the rails, I made one more drilling guide (Figure 4). The details for making it are in Shop Notes on page 65.

STAIN & FINISH. Before you begin assembling the hall tree, take a moment to stain and finish all the components. The details on the stain and finish I used are on page 67.

HALL TREE ASSEMBLY. Now you can break out the glue and clamps and get down to business, as shown in Figure 5. I joined the pairs of legs together with slat frames first, and then added the other two frames to bring the entire hall tree assembly together.

ADD THE SHELVES. The final step is to add the two shelves (Figure 6). These should slip right into position from below and stop sliding up when they're in place. After making sure the shelves are level with the floor, installing them is a simple matter of driving screws through the corner blocks and into the holes you drilled in the corner of each leg (Figures 6a and 6b).

How-To: ASSEMBLE THE HALL TREE

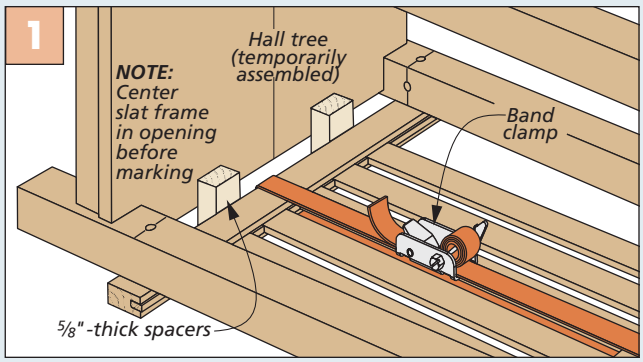

Size the Rails. Use the dry-fit legs and shelves to determine the length of the slat rails. After you center the slat frames, use a pencil to mark the ends of the rails (Figure 2).

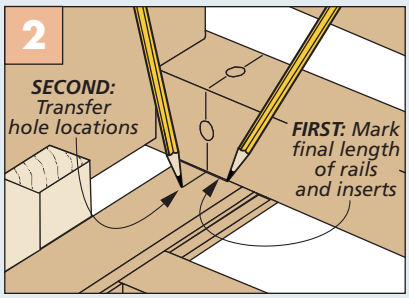

Hole Locations. Also transfer the dowel locations from the legs to rails.

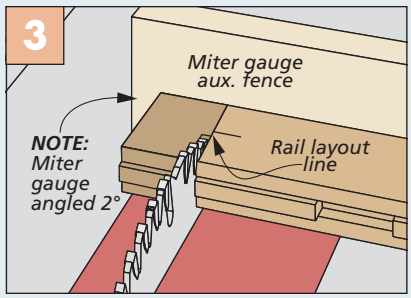

Bevels. Disassemble the slat frames and bevel the slat rails to final length.

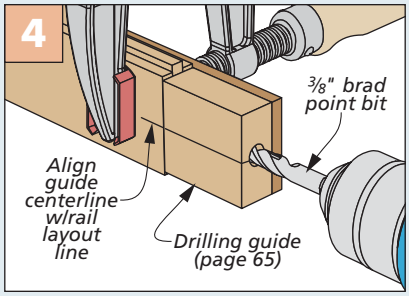

Dowel Holes. Use a drilling guide (page 65) to drill the holes for the dowels in the ends of the slat rails.

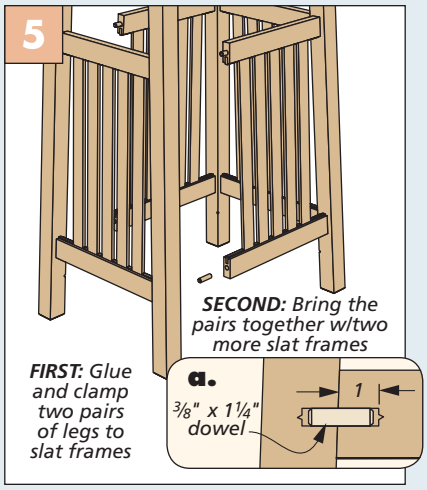

Assembly. Glue and clamp the slat frames between a pair of legs. Then join the pairs to one another.

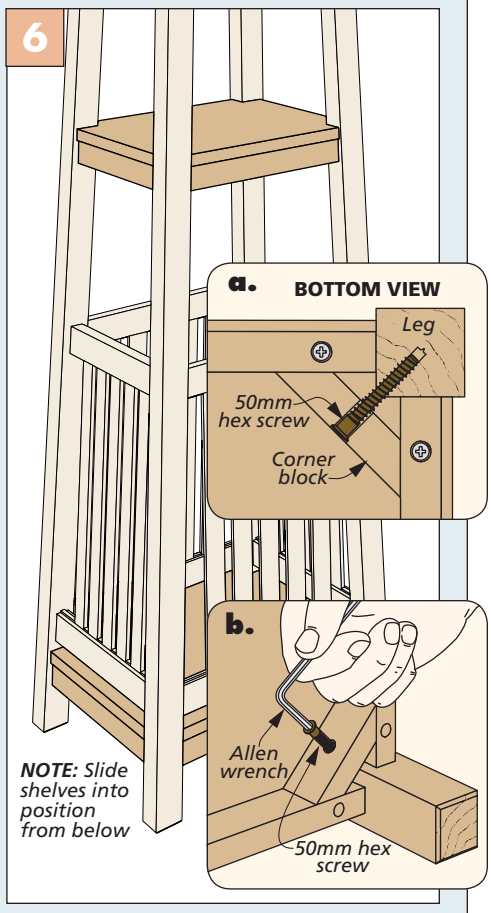

Add Shelves. Slip the shelves into position from below, and install them with the hex screws.

Add the TOP & MIRROR

At this stage, your hall tree is nearing completion. All that's left are a top panel and mirror to finish things up.

TOP. Like the shelves beneath it, the top assembly is a solid-wood panel with rails and corner blocks fastened to the underside. But since the top isn't notched at the corners like the shelves, you'll go about building it a little differently.

The top features a bevel that eases the edge and lends a stylish look to the hall tree. After gluing up the top panel and cutting it square, I added the bevel as shown in Figure 1 below.

TOP RAILS & CORNER BLOCKS. Since the rest of the hall tree is all put together at this stage, it's best to use the assembled project as the guide for both sizing the top rails and installing them on the top panel. It's easy to do this by turning everything upside down, as shown in Figure 2 below. First, you can center the top on the four legs, and mark their positions. While you're at it, measure for the length of the top rails.

With the rail dimensions established, head to the table saw and bevel the top rails to final length to fit between the legs. This involves angling the miter gauge slightly and trimming them at 92°, just as you did with the slat rails on the previous page. Now is also a good time to cut the corner blocks to final size and drill the holes in the centers.

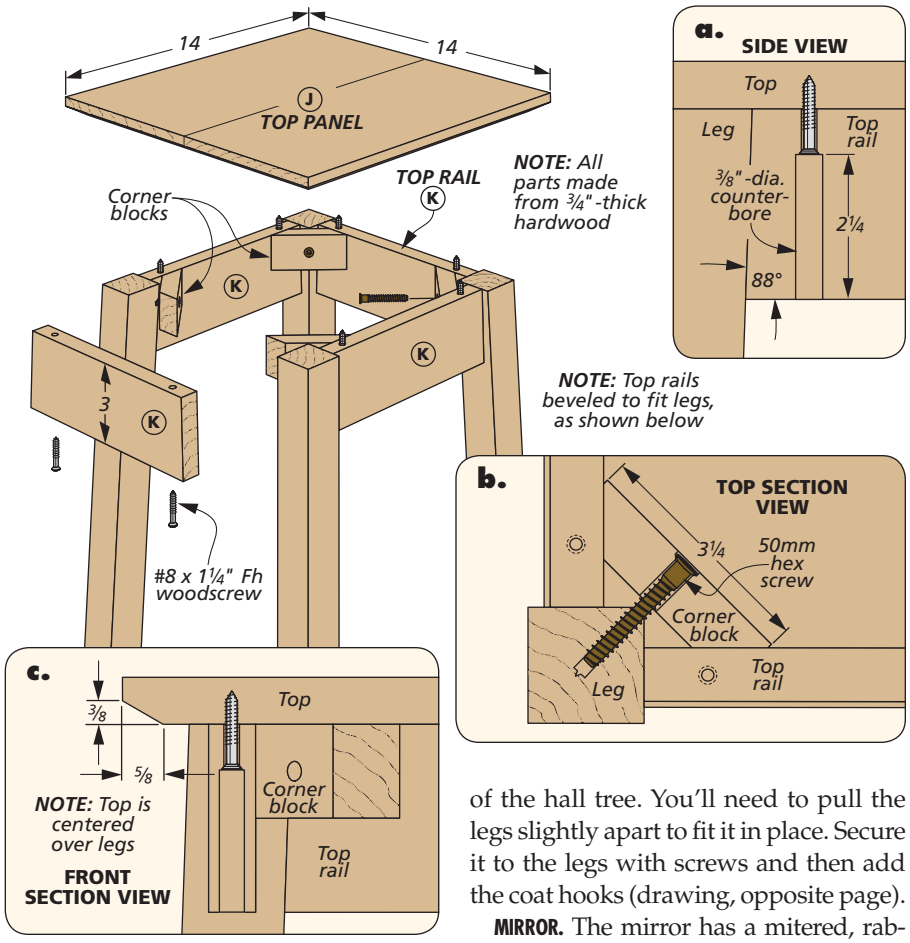

TOP IT OFF. Align the rails with the pencil marks you made and drive in screws to secure them (refer to Figure 3 below and detail 'a' above). Glue the corner blocks to the underside of the top and rails.

After applying stain and finish, you can slip the top panel in place at the top of the hall tree. You'll need to pull the legs slightly apart to fit it in place. Secure it to the legs with screws and then add the coat hooks (drawing, opposite page).

MIRROR. The mirror has a mitered, rabbeted frame that's mounted between two legs of the hall tree. A pair of fittings allow the frame to pivot back and forth.

Since the mirror frame needs to match the taper of the hall tree frame, it doesn't have 45° miters at the corners. The angles are shown in the drawings on the opposite page, but it's worth making test cuts and checking the fit of the frame in the completed assembly before ordering glass.

How-To: INSTALL THE TOP PANEL

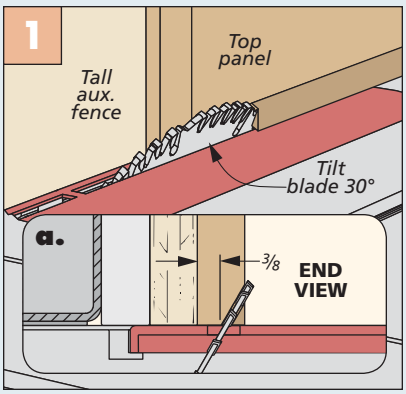

Bevel. Tilt the table saw blade and pass the top along a tall auxiliary rip fence to bevel the ends and edges.

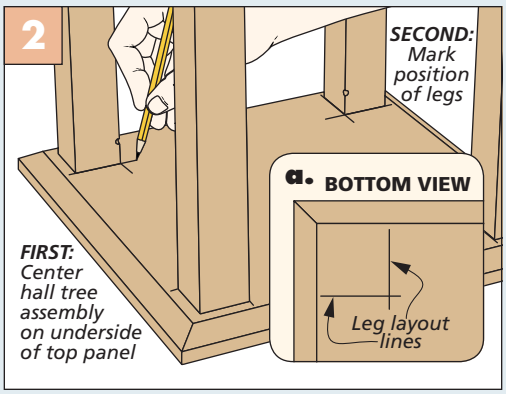

Layout. Position the top panel upside down, and center the assembled hall tree on it. Mark where the legs meet the top.

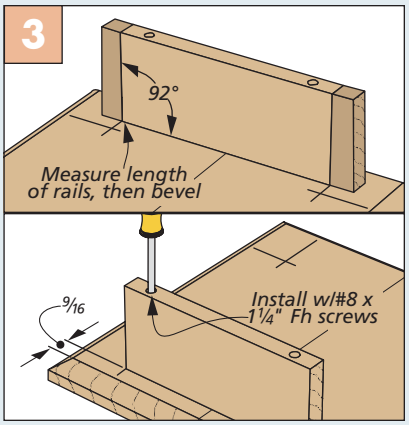

Rails. After beveling the top rails to fit (top drawing), screw them in place on the top panel (bottom).

First, you'll want to cut longer blanks to width for the mirror rails and stiles. Then rabbet the frame parts (detail 'b'). After cutting the miters, drill holes in the stiles to accept threaded inserts (detail 'a'). Later on, these inserts accept the fittings for securing the mirror. Once you install the inserts, it's time to glue and clamp the mirror frame together.

You'll notice that the mitered corners have splines glued into kerfs. These reinforce the frame and lend a decorative touch. You'll find the techniques I used for adding the splines in Shop Notes on page 64. Once that's done, you're ready to stain and finish the mirror frame.

I had the mirror cut to fit my frame at a local glass shop. To secure the mirror, I added some posterboard and installed offset clips in counterbored holes (details 'b' and 'c').

Now bring the frame into position, and thread the mirror fittings through the legs and into the threaded inserts in the mirror stiles to secure it. Your hall tree is now ready to be moved into place. It's sure to be a useful addition to your home's entryway. W

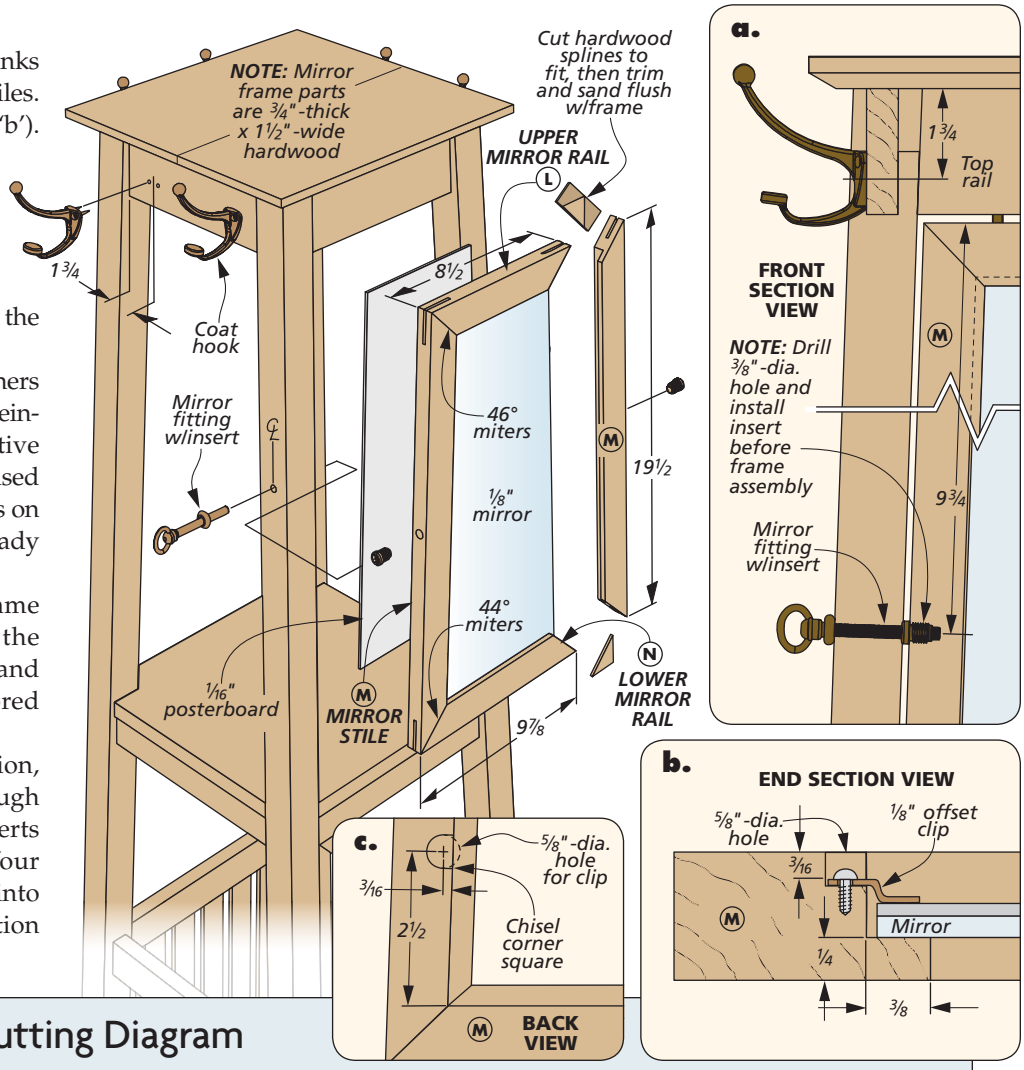

Materials, Supplies & Cutting Diagram

A	Legs (4)	1 5/8 x 1 5/8 - 70 rgh.	**H**	Slat Rail Inserts (8)	5/8 x 1/4 - 14 rgh.	•	(24) #8 x 1 1/4" Fh Woodscrews
B	Lower Shelf (1)	3/4 x 15 3/4 - 15 3/4	**I**	Slats (20)	1/4 x 1 1/4 - 17 1/2	•	(12) 50mm Hex Screws
C	Middle Shelf (1)	3/4 x 13 3/8 - 13 3/8	**J**	Top Panel (1)	3/4 x 14 - 14	•	(16) 3/8"-dia. x 1 1/4" Dowels
D	Lower Shelf Rails (4)	3/4 x 1 1/2 - 13 1/2 rgh.	**K**	Top Rails (4)	3/4 x 3 - 9 rgh.	•	(6) Bronze Coat Hooks
E	Middle Shelf Rails (4)	3/4 x 1 1/2 - 11 1/4 rgh.	**L**	Upper Mirror Rail (1)	3/4 x 1 1/2 - 8 1/2	•	(2) Mirror Swivel Fittings
F	Corner Blocks (12)	3/4 x 1 1/2 - 3 1/4	**M**	Lower Mirror Rail (1)	3/4 x 1 1/2 - 9 7/8	•	(1) 1/8"-thick Mirror (see below)
G	Slat Rails (8)	3/4 x 1 3/4 - 14 rgh.	**N**	Mirror Stiles (2)	3/4 x 1 1/2 - 19 1/2	•	(1) 1/16"-thick Posterboard
						•	(4) 1/8" Offset Clips

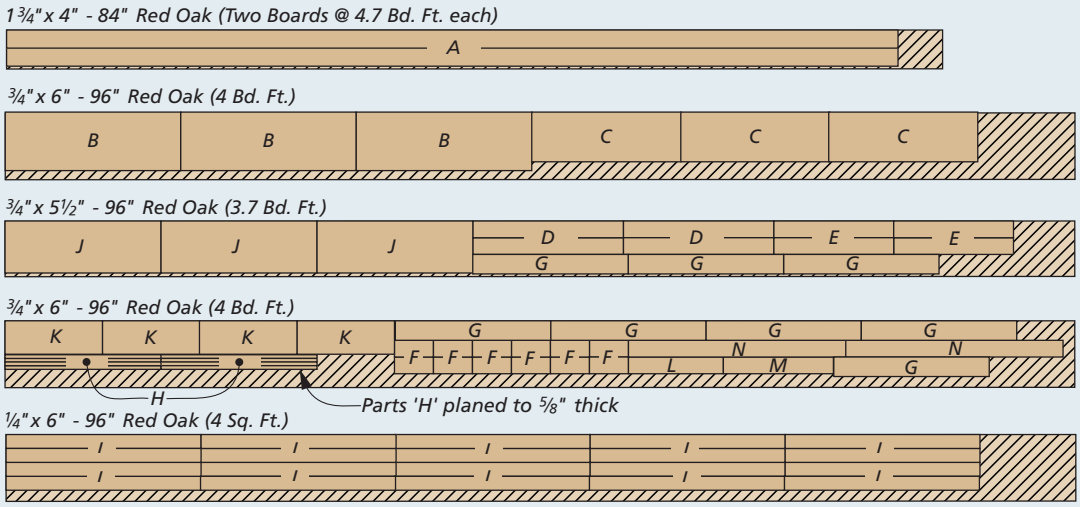

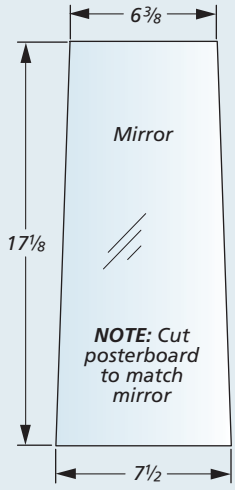

Weekend Project

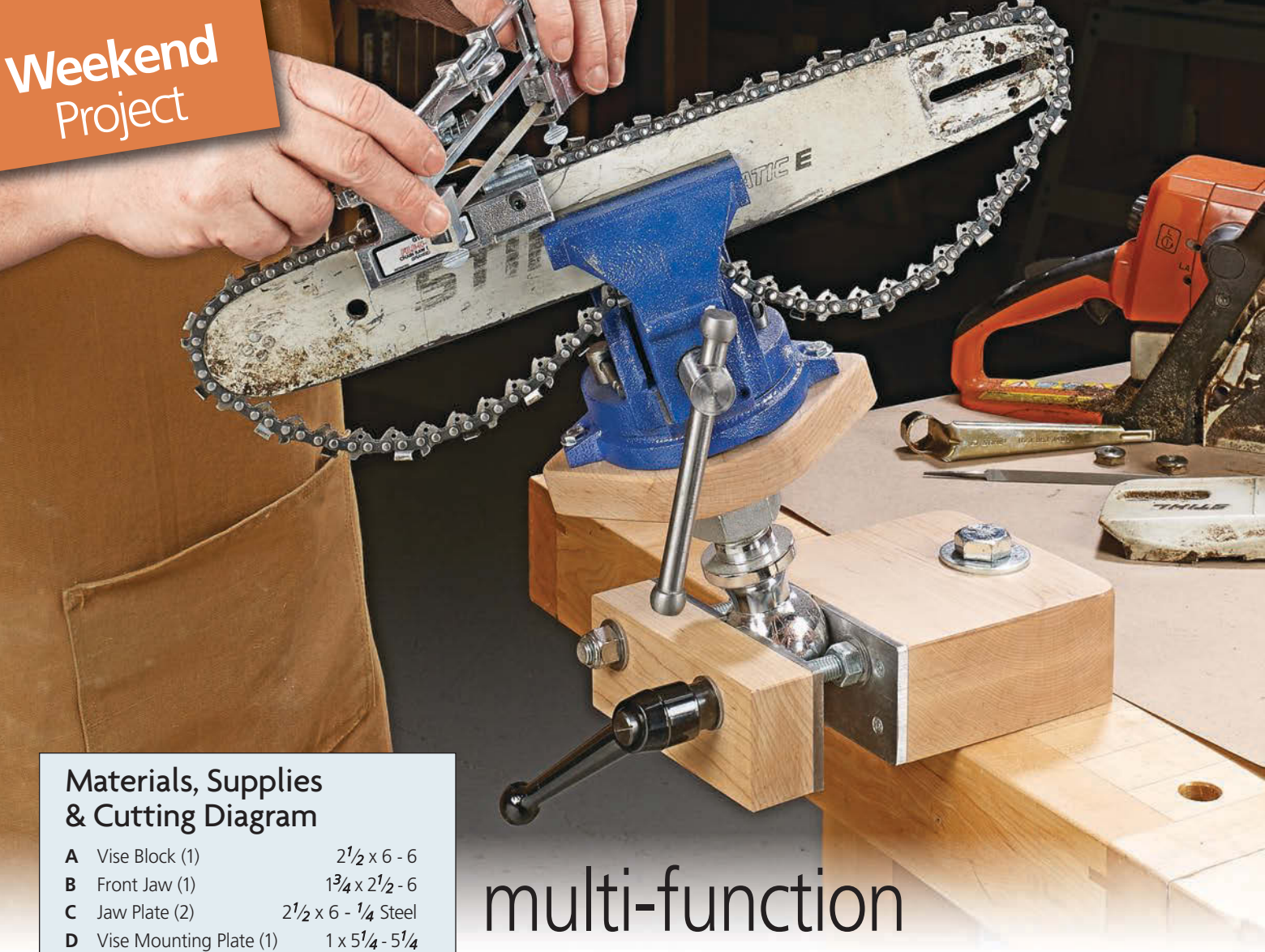

multi-function Swivel Vise

Position a workpiece exactly where you need it with this versatile vise. The quick-change design allows for mounting multiple accessories.

Materials, Supplies & Cutting Diagram

A	Vise Block (1)	2½ x 6 - 6
B	Front Jaw (1)	1¾ x 2½ - 6
C	Jaw Plate (2)	2½ x 6 - ¼ Steel
D	Vise Mounting Plate (1)	1 x 5¼ - 5¼

- (1) 2 5/16"-dia. Hitch Ball
- (1) 1¼" Pipe Flange
- (1) ½"-13 Adjustable Handle
- (2) ½"-13 x 10¾" Threaded Rods
- (4) ½"-13 Hex Nuts
- (1) ½"-13 Hex Lock Nut
- (6) ½" USS Washers
- (1) ¼"- 2½" x 24" Steel Bar
- (8) #8 x 1" Fh Woodscrews
- (1) ¾"-10 x 7" Hex Bolt
- (1) ¾"-10 Hex Nut
- (2) ¾" USS Washers
- (4) ¼"-20 x 1¼" Hex Head Mach. Screws
- (4) ¼" USS Washers
- (4) ¼"-20 T-nuts

1¾"x 6½"- 24" Hard Maple (2.2 Bd. Ft.)

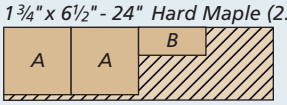

1"x 6 "- 12" Hard Maple (.6 Bd. Ft.)

NOTE: *Parts A are planed to 1¼" thick*

There's no denying that many of us could benefit from a fully adjustable, rotating vise in our shop from time to time. Having the ability to quickly rotate and position a workpiece is a huge advantage when performing certain tasks. However, finding the workbench space to permanently mount a tool that may not be used all the time isn't the best use of space. The shop-built vise shown here is the perfect solution.

This vise can be temporarily mounted to a workbench using existing dog holes and easily removed when not needed. But the genius of this vise is the use of a standard hitch ball between the vise jaws that gives you complete adjustability on two axes. Simply release the handle to rotate and tilt the workpiece to the position needed.

On the main mounting platform, shown above, I attached a machinist's vise (also called a mechanic's vise) for handling many common clamping situations. For even more versatility, check out the additional clamping fixtures at

the bottom of page 27. The plans for these fixtures are available as Online Extras and can be found at *Woodsmith.com*.

VISE BLOCK & FRONT JAW

The vise is constructed from a combination of hardwood and steel hardware. But you won't need a full metal shop to fabricate the steel components. Most of the steel work can be performed with a hack saw, a few metal files, and a drill press.

BLOCK & JAW FIRST. It really doesn't matter whether you make the vise block and front jaw from one solid blank or glue it up from thinner stock. Just be sure to choose a solid hardwood for long-term durability. For the vise block, I planed an oversized blank down to 1¼" thick. I then cut the board in half and face glued the pieces together.

After cutting the two parts to size, you'll want to lay out the locations for the ½"-dia. through holes in the block and jaw. These holes will house the threaded rods that secure the vise halves together. Detail 'a' at right shows the position of these holes.

COUNTERBORE & DRILL. Start by drilling the counterbores on the back end of the vise block using a Forstner bit in the drill press. The How-To box below gives the details. Now switch to a ½"-dia. twist bit and drill the two through holes in the front jaw.

The block also gets two holes that match up with the holes in the jaw. However, because the block is 6" wide, these holes need to be drilled from both ends of the block. I transferred my layout lines around the face of the workpiece, as shown below. With the workpiece positioned against the drill press fence, drill at least halfway through one end of the block. Flip the piece end-for-end, keeping the same face against the fence, and complete the holes.

One more hole in the top of the vise block completes the drilling operations. This ¾" hole is for the bolt needed to secure the assembly to the workbench.

ROUND CORNERS. The back corners of the vise block are rounded off. This is easy to do at the band saw. A quick trip to the disc sander does a good job cleaning up the saw blade marks and leaving a smooth surface.

CHAMFER EDGES. To ease any sharp edges, I used a chamfer bit in the router table to chamfer the top and bottom edges of the vise block, as well as the top, bottom, and side edges of the front jaw.

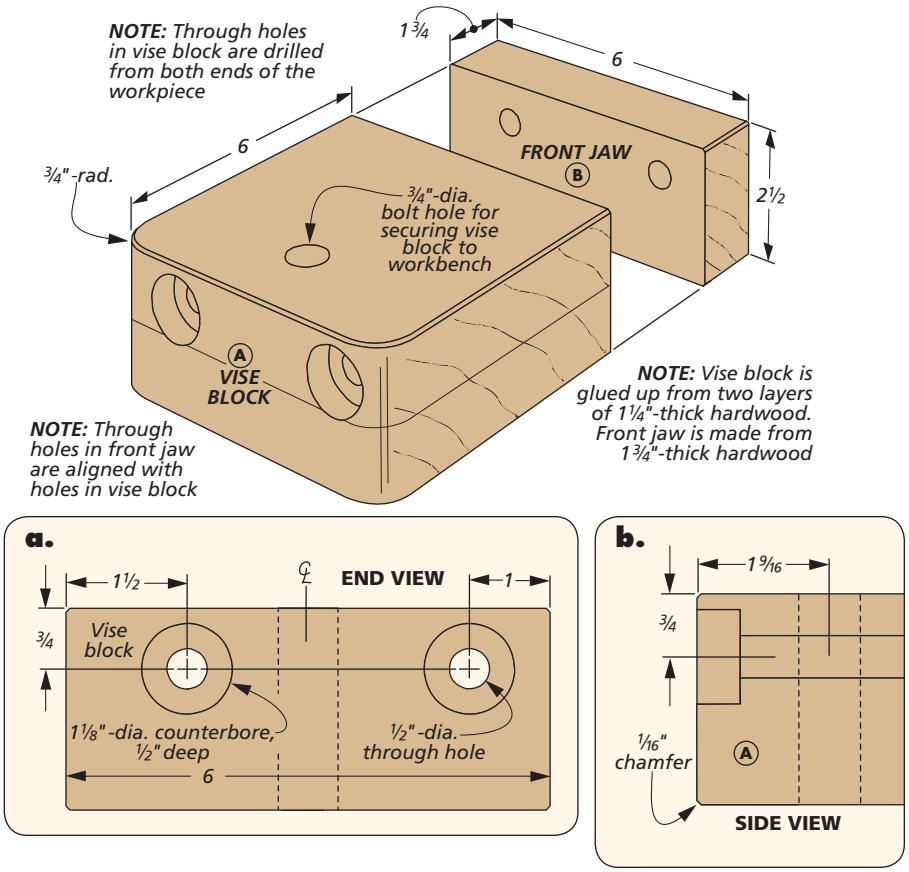

How-To: DRILL LONG HOLES

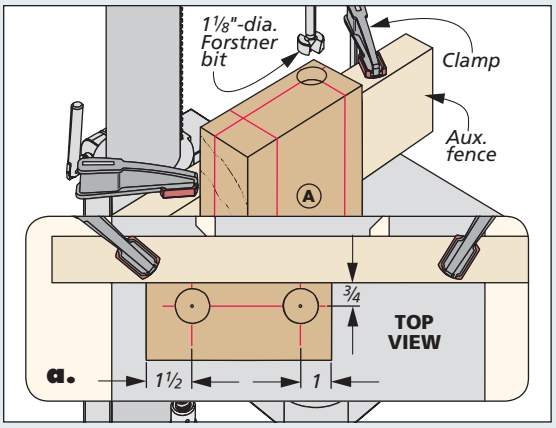

Two Counterbores. After laying out the hole locations, reference the workpiece against the drill press fence and drill the counterbores.

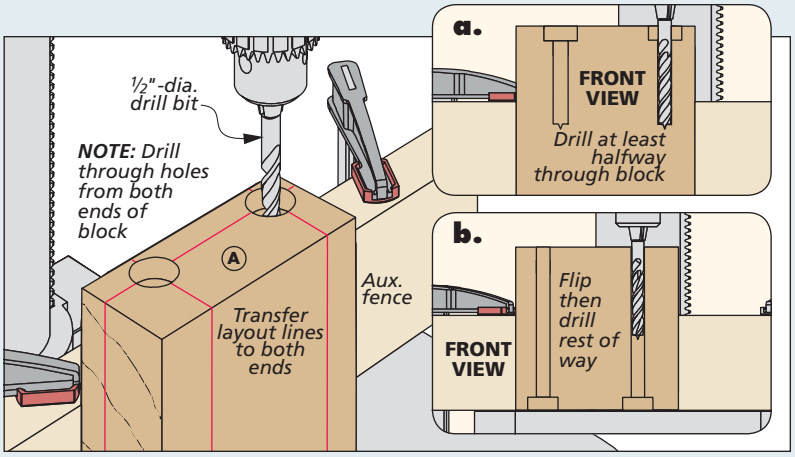

Drill Twice. Starting on the counterbored end of the block, drill at least halfway through the block (detail 'a'), then flip the piece end-for-end and complete the holes from the other edge (detail 'b').

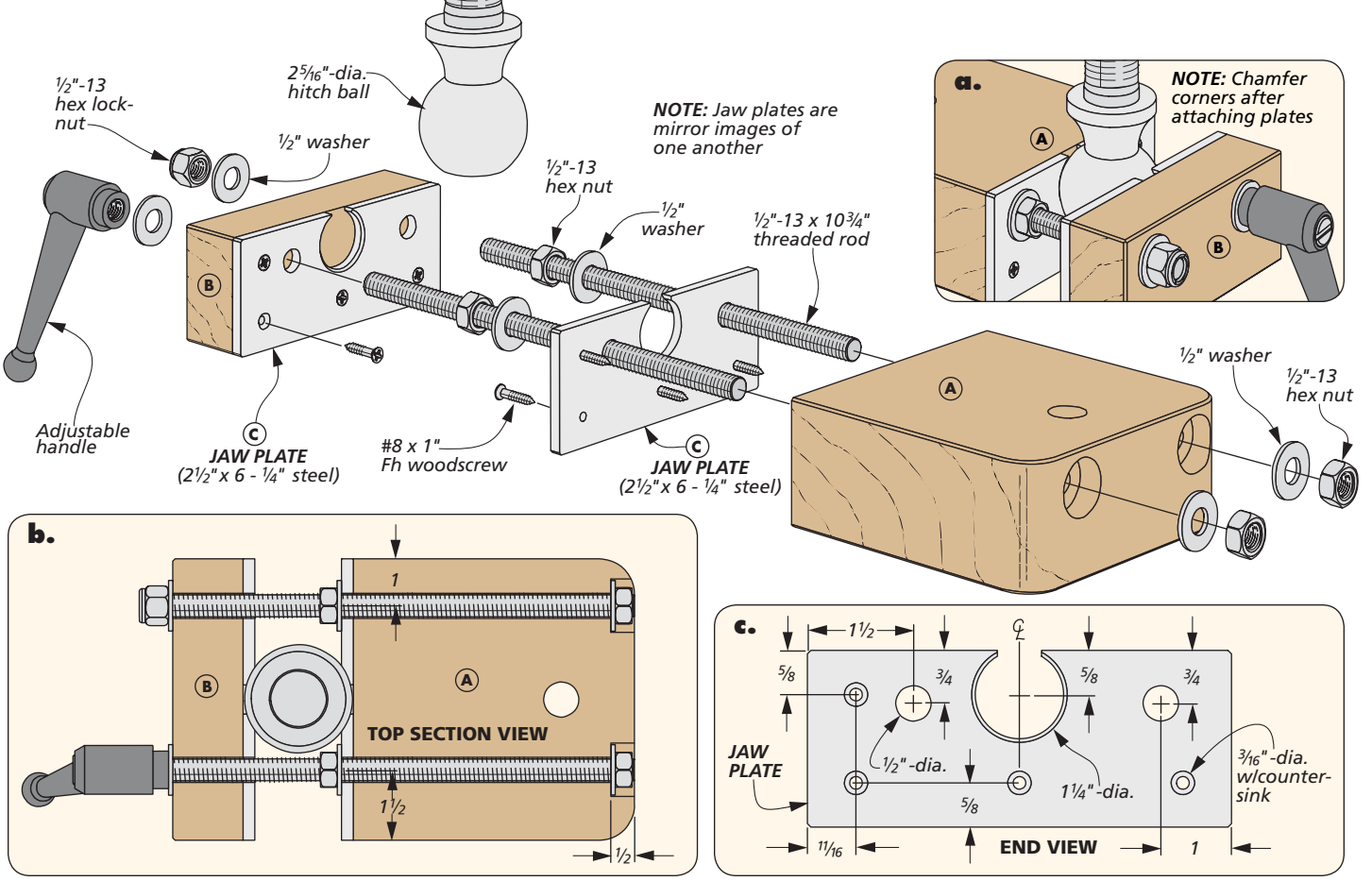

add the hardware
& VISE

With the bulk of the woodworking for the multi-purpose vise done, you can turn your attention to some light metal-working. The two steel jaw plates are fabricated and attached to the vise block and front jaw. These jaw plates help to secure the hitch ball. It's then just a matter of adding some hardware and making the machinist's vise mounting platform.

TWO STEEL JAW PLATES. To keep the amount of metal cutting needed to a minimum, I purchased a section of ¼"-thick steel that was 2½"-wide and long enough to accommodate both jaw plates. All I needed to do was cut the two sections to length with a hack saw and clean up the edges with a metal file.

DRILLING THE HOLES. Several holes need to be drilled in the steel jaw plates (detail 'c'). The large center hole secures the hitch ball while the two ½"-dia. holes allow the threaded rod to pass through. Also, there are four mounting holes in each plate. To keep them all aligned, I stacked the plates together to drill these holes, as shown in the How-To Boxes below.

Be sure the workpieces are secured to the drill press table. This keeps the pieces from potentially catching on the drill bit and spinning. I used a handscrew to hold the workpieces and clamped it to the table.

After drilling all of the through holes, remove the clamps and label the two jaw plates (drawing below). This ensures the countersinks for the mounting holes and

How-To: METAL WORK

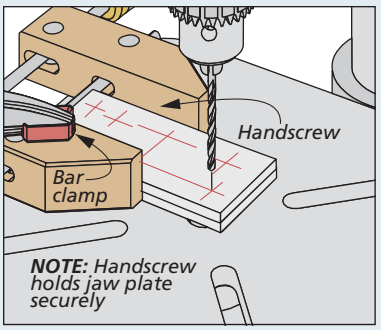

Jaw Plates. Stack the jaw plates and clamp in a handscrew. A bar clamp secures it to the table.

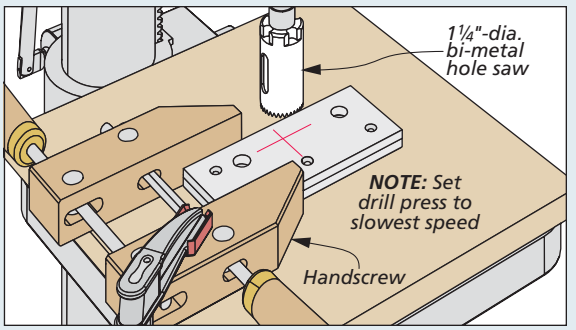

Hitch Ball Hole. A bi-metal hole saw works great to drill the hole in the center of the plates. Cutting fluid is essential for drilling this large hole.

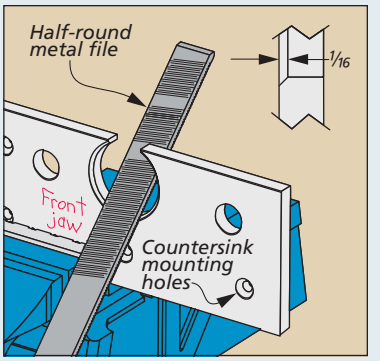

Chamfer Hole. Use a half round metal file to chamfer the edge of the hitch ball hole.

the chamfered edges of the large center holes are mirror images when drilled.

ADD VISE HARDWARE. The jaw plates are attached to the vise block and front jaw with woodscrews. I filed a slight chamfer on all four corners of each jaw plate to match the chamfer on the block and jaw.

Now secure the vise block and front jaw assemblies together with a pair of threaded rods, washers, and nuts, as shown in the main illustration on the opposite page. Also, install the adjustable handle on one threaded rod.

VISE MOUNTING PLATE. The next step is to make the mounting plate for attaching the machinist's vise (detail 'a'). Cut the plate to size and round the corners with a band saw. I also chamfered the edges to match the vise block and jaws.

Since flange hole patterns may vary, you'll want to use the pipe flange you purchased to mark the mounting holes on the plate. Once this is done, drill through holes and counterbores for some T-nuts and then tap them in place with a hammer.

FINISHING TOUCHES. Just a few more details need attention to complete the swivel vise. First, screw the hitch ball to the flange and secure it with the supplied nut. Next, you'll use the hole pattern of the machinist's vise to locate and drill the holes in the mounting plate. Attach the vise to the mounting plate with bolts and nuts (detail 'c,' at right).

Finally, you're ready to attach the swivel vise to your workbench. A large hex bolt through a dog hole works great. Now you can put your new vise to work. W

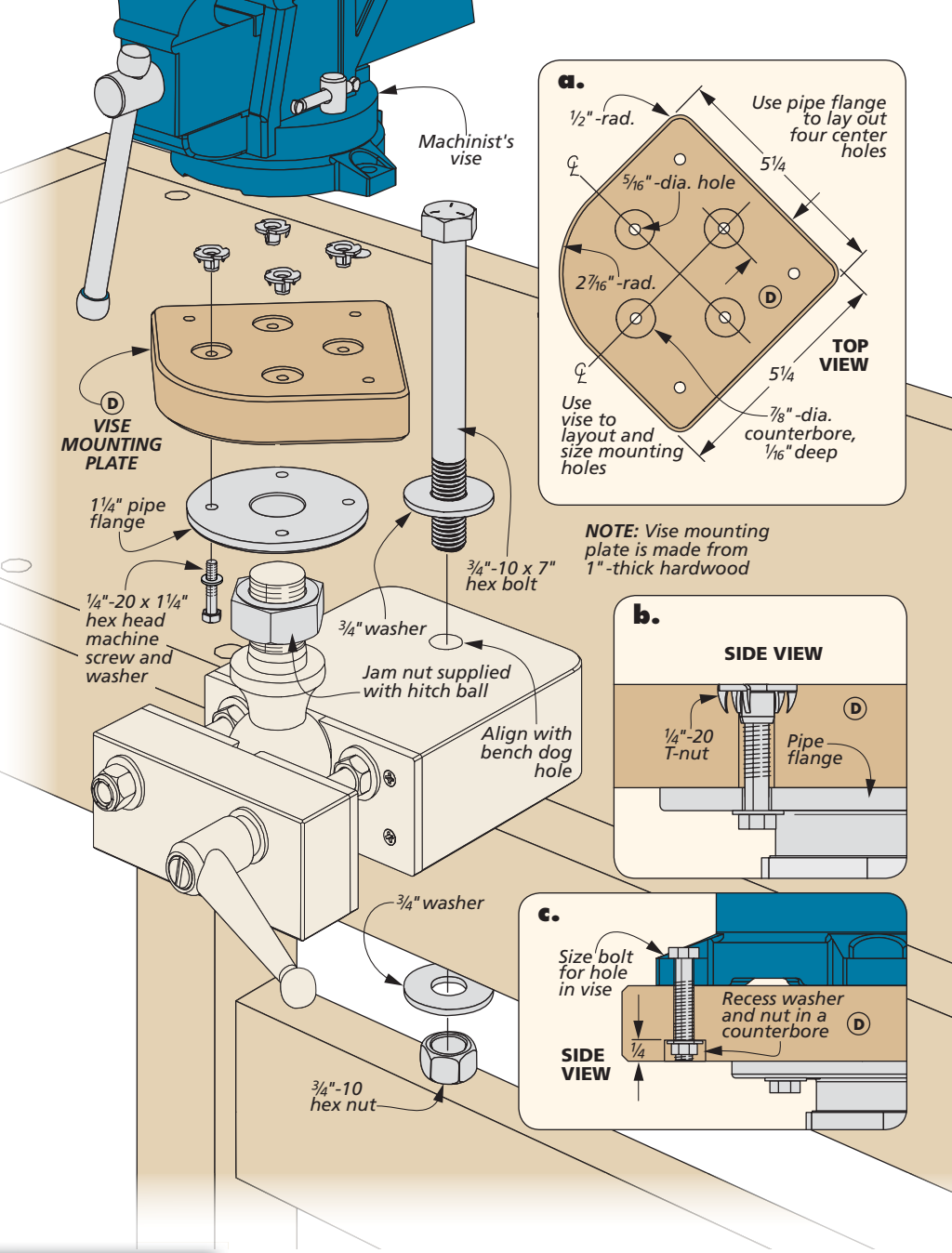

ADDITIONAL CLAMPING FIXTURES

Give the multi-function swivel vise even more versatility with the addition of these two clamping fixtures. The plans for these fixtures are available on our Online Extras page at *Woodsmith.com*.

Woodsmith GO ONLINE EXTRAS

For two more accessories, go to Woodsmith.com

Online Extra

multi-function vise

Handscrew Mount

As a stand-alone project, the swivel vise from *Woodsmith* No. 219 is an incredibly useful shop accessory. But you can give the vise even more versatility by building a couple additional clamping fixtures. The first fixture (shown at right) is a mount for a standard 10" handscrew.

QUICK CONSTRUCTION. Start by cutting the base and two brackets to size. To match the look of the vise, I chamfered the edges of these parts, as shown in the drawings at right. There are a couple of options when it comes to marking the holes in the base for the pipe flange. You can use the pipe flange from the machinist's vise mount and move it each time you switch between fixtures. Or, the option I chose was to purchase an extra flange and leave it attached to the base. This makes it easy to switch between clamping fixtures by unscrewing the flange from the hitch ball.

DRILL HOLES & ASSEMBLE. With the flange location marked, drill the holes in the base. You'll then drill the counterbores for the T-nuts and tap them in place with a hammer. Next, I attached the brackets to the base with some screws and held one leg of the handscrew between the brackets to mark and drill the through holes for the bolts (detail 'a'). Secure the handscrew with two carriage bolts, nuts, and washers, and it's ready to use.

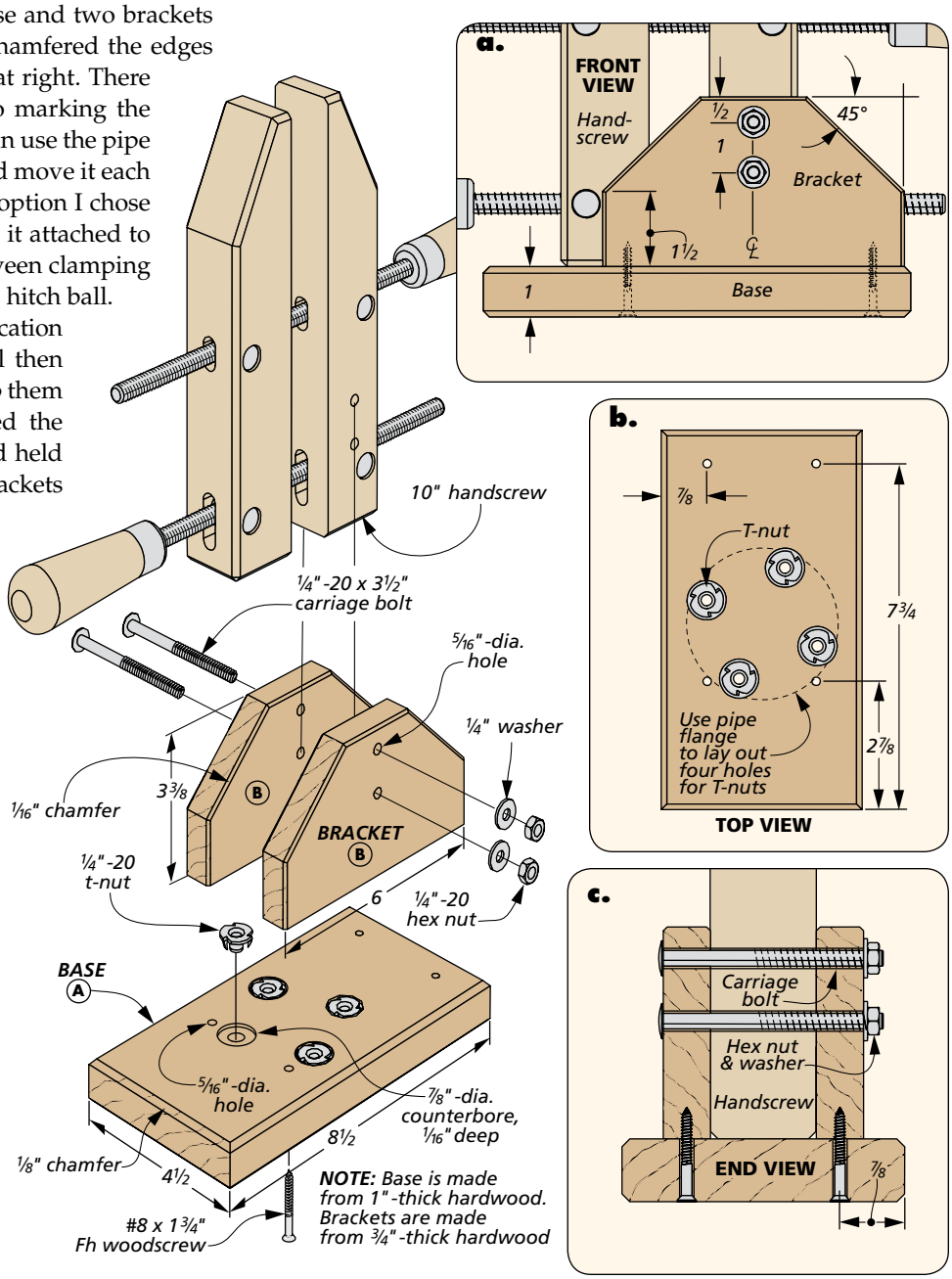

Materials, Supplies & Cutting Diagram

A	Base (1)	1 x 4 1/2 - 8 1/2
B	Brackets (2)	3/4 x 3 3/8 - 6

- (4) 1/4"-20 T-Nuts
- (1) 1 1/4" Pipe Flange
- (4) #8 x 1 3/4" Fh Woodscrews
- (2) 1/4"-20 x 3 1/2" Carriage Bolts
- (2) 1/4"-20 Hex Nuts
- (2) 1/4" Washers
- (1) 10" Handscrew

1"x 5" - 24" Hard Maple (1.0 Bd. Ft.)

3/4"x 4" - 24" Hard Maple (.7 Bd. Ft.)

 ©2015 August Home Publishing. All rights reserved.

Online Extra

Bar Clamp Mount

Having built two mounts for my swivel vise (one for a machinist's vise and one for a handscrew), I still felt the need to add one more fixture. That third fixture is the bar clamp mount you see at right. This mount holds two bar clamps in a couple of cradles and adds even more functionality to my swivel vise.

FAMILIAR CONSTRUCTION. You'll notice right away that the base for the bar clamp mount is very similar to the base for the handscrew mount, just a little longer. This is a good place to start. Cut the base to size and chamfer the edges. You'll also lay out the holes to mount the pipe flange as before. Now, drill these through holes and the counterbores for the T-nuts (detail 'a'). Tap the T-nuts in place with a hammer.

CRADLE BLOCKS. The cradle blocks are next. They hold the bar clamps in an upright position. Glue up a couple of pieces of ¾"-thick stock, plane them to final thickness, and then cut them to size. I used a dado blade in my table saw to cut the slots for the bar clamps. Most bar clamps have a similar design, but be sure to have the clamps that you'll be using on hand in order to size the slots. Now, chamfer the edges of the blocks (drawing at right and detail 'a') and attach them to the base with glue. The through hole in the center of the block and base are made at the drill press.

HOLD-DOWNS. All that's left is to fashion a couple hold-downs from a ¼"-thick piece of steel. These pieces hold the bar clamps securely in place. Finish up by drilling a centered hole in each hold-down. Drop the bar clamps into the slots and lock them in place with the hold-downs, carriage bolts, and knobs. W

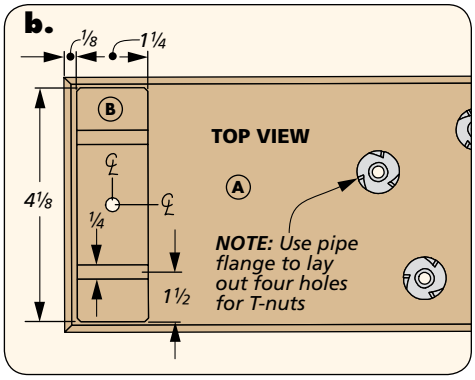

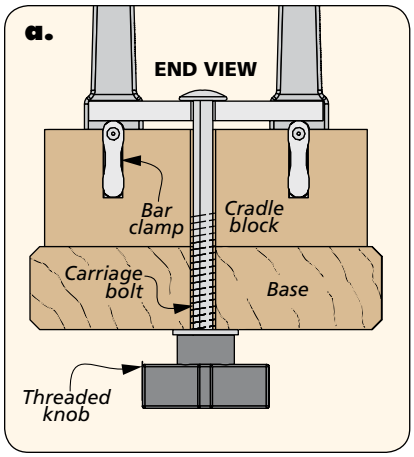

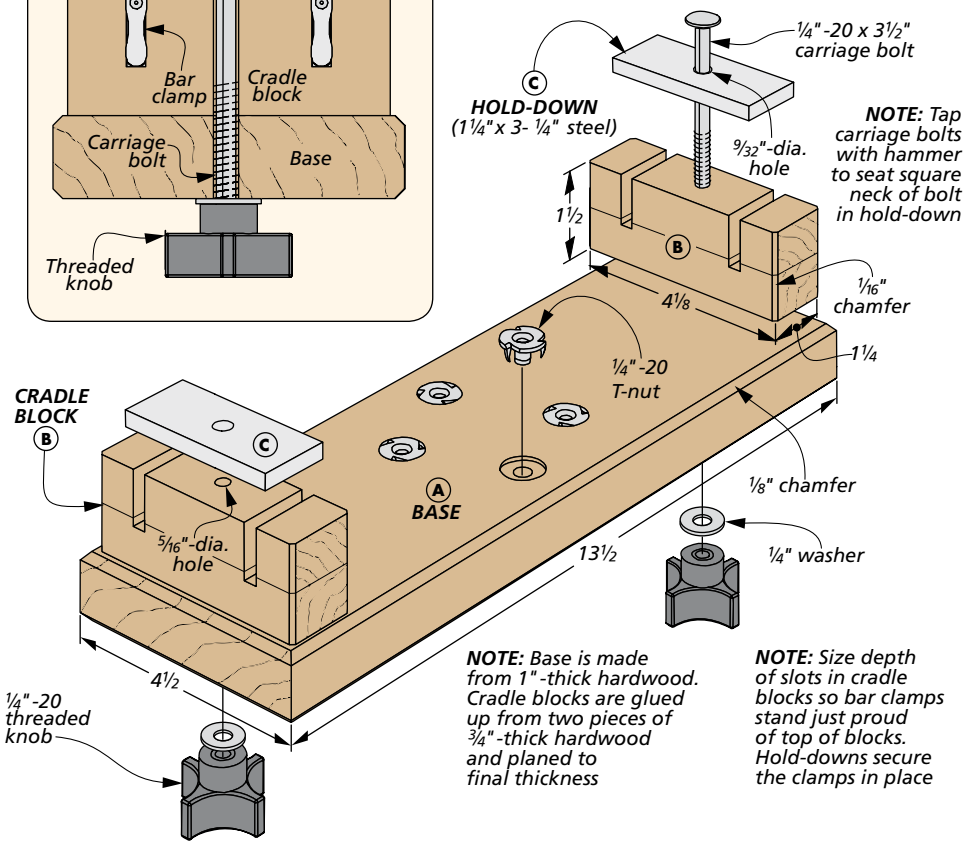

Materials, Supplies & Cutting Diagram

A	Base (1)	1 x 4½ - 13½
B	Cradle Blocks (2)	1¼ x 1½ - 4⅛
C	Hold-Downs (2)	1¼ x 3 - ¼ Steel

- (4) ¼"-20 T-nuts
- (1) 1¼" Pipe Flange
- (2) ¼"-20 x 3½" Carriage Bolts
- (2) ¼" Washers
- (1) ¼"- 1¼" x 12" Steel Bar
- (2) ¼"-20 Threaded Knobs
- (2) 12" F-Style Bar Clamps

1"x 5"- 24" Hard Maple (1.0 Bd. Ft.)

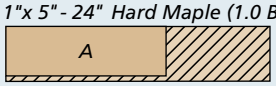

¾"x 4"- 24" Hard Maple (.7 Bd. Ft.)

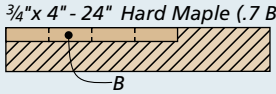

 ©2015 August Home Publishing. All rights reserved.

Shop Project

Heavy-duty Hobby Bench

A large worksurface, plenty of storage options, and traditional looks make this bench the ideal setup for a workshop or hobby room.

Practicing a hobby or craft is a great way to while away a few hours doing something creative and relaxing. Even better is having a dedicated place to work — a kind of getaway from the everyday. That's just what the compact workbench shown here provides.

Overall, it has a just-right feel to it. The benchtop has a lot of room to spread out and work. And the base is built stout to stand up to all kinds of use.

The bench design is inspired by a watchmaker's bench. These benches have a cutout in the front edge of the top to create a wrap-around worksurface that lets you keep items close at hand.

Another feature of these types of benches is the ample storage space. Whether your hobby is carving, fly tying, or model-making, the ability to organize your tools and supplies is important for making the most of your time. The 13 box-jointed drawers should hold everything you need and more. Plus, you have the option of adding racks to the ends of the bench (middle photo, opposite page) and a tool rack along the back (photo above).

Construction Overview / OVERALL DIMENSIONS: 54"W x 36"H x 22¾"D

Optional tool rack keeps frequently used tools within easy reach (refer to Woodsmith.com for details)

Cutout in benchtop improves access for close-up work

Benchtop laminated from strips of edge grain hard maple for durability

NOTE: Base and drawers are made from riftsawn red oak

Adjustable shelf rests on shelf supports between drawer cases

NOTE: Drawer cases are made from riftsawn red oak plywood

End assemblies constructed with mortise and tenon joinery

Optional easy-to-build racks hold tall items (middle photo below)

Drawers slide on hardwood runners

Drawer back is inset to allow access to contents without drawer tipping out of case

Threaded inserts and machine screws lock components together for easy assembly

Base assembly features bench bolt hardware

NOTE: For hardware sources, turn to page 67

Drawer fronts and sides are assembled with box joints

▲ Bench dog holes in the top can be used as anchoring points for carving vises or benchtop tools.

▲ Build these shallow racks to attach to the end of the bench to keep materials close at hand.

▲ Optional workbench casters (refer to Sources, page 67) make moving your bench a piece of cake.

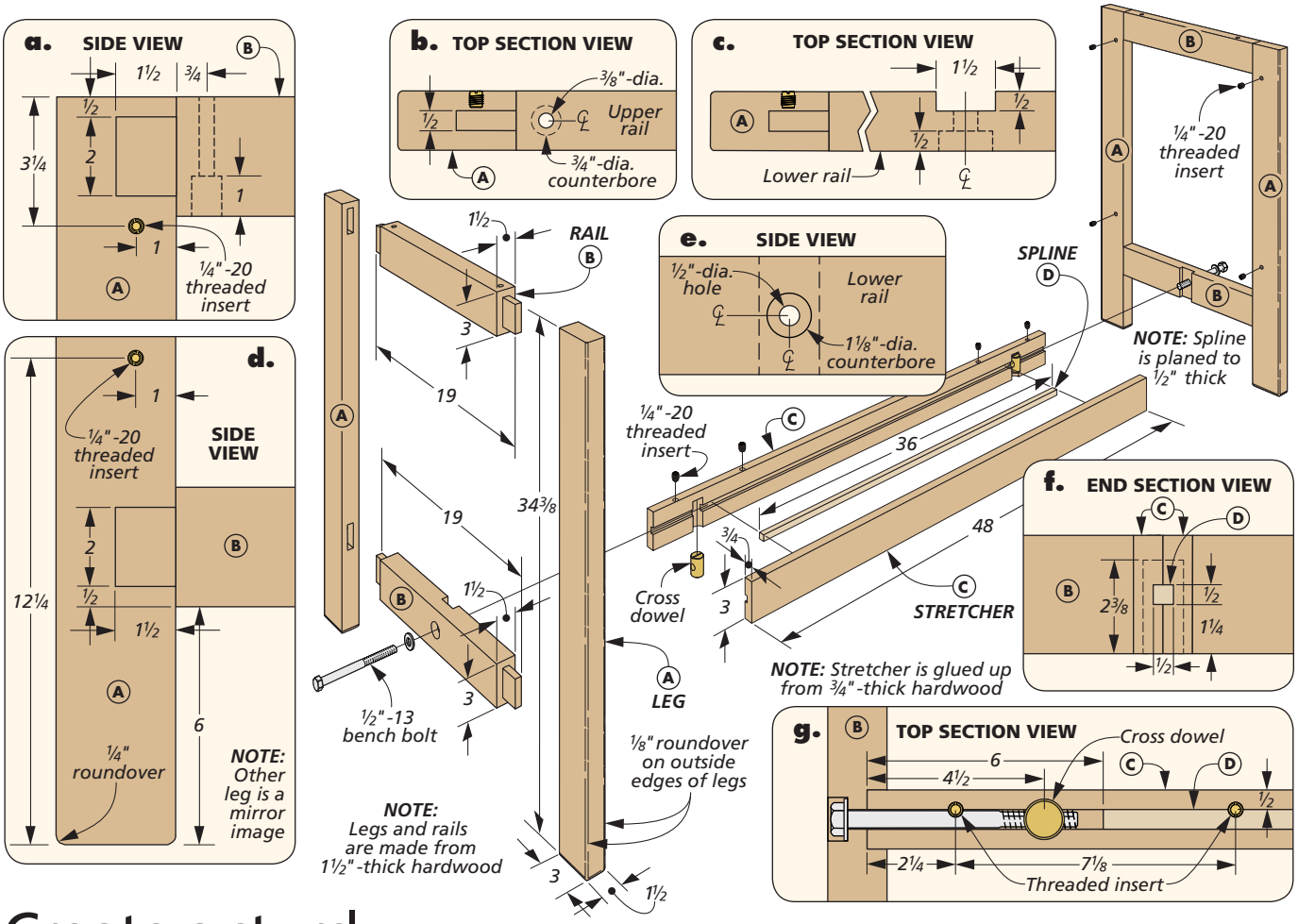

Create a sturdy **BASE & TOP**

The base is a good place to start on the hobby bench. One challenge when building many workbenches is having to move around the large, heavy assemblies. With this bench, I worked around that problem by building it up from smaller subassemblies that are then bolted together.

END ASSEMBLIES. The legs and rails that make up the end assemblies are joined with mortises and tenons. The box below highlights the steps involved.

In addition to the joinery, you need to add a few other details. The first is installing a set of threaded inserts in the legs (details 'a' and 'd'). These anchor the drawer cases to the base.

As for the rails, you'll want to drill holes in them for attaching the top, as shown in details 'a' and 'b.' The lower rail has a dado and counterbored hole, as illustrated in details 'c' and 'e.' This serves as a registration point for the stretcher assembly. Once you have the end assemblies in clamps, you can turn to the stretcher assembly that joins them.

STRETCHER. Bench bolts are used to join the ends and stretcher. At each end, a long bolt passes through the lower rail and threads into a cross dowel in the stretcher

How-To: BASE & STRETCHER CONSTRUCTION

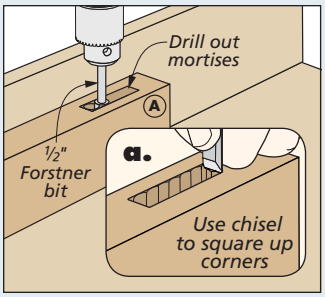

Mortises. A Forstner bit lets you drill overlapping holes to remove most of the waste.

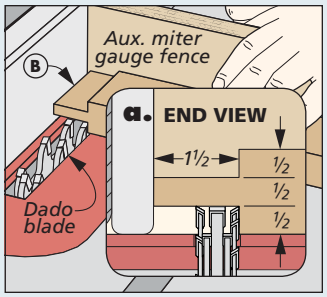

Cutting Tenons. Make overlapping passes with a dado blade to shape the tenons.

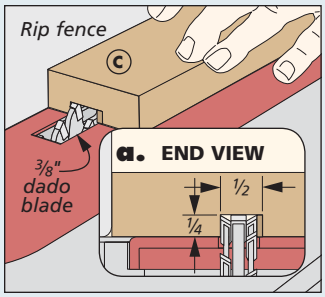

Centered Groove. Cut a groove to create a hole for the draw bolt and spline.

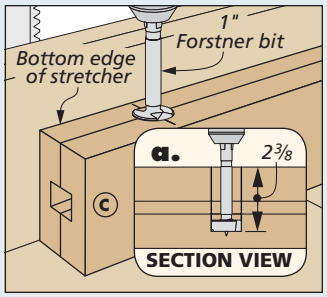

Drill. After assembly, drill an intersecting hole to accept the cross dowel.

(refer to detail 'g' on the opposite page). The challenge is creating a long, straight hole in the end of the stretcher.

My solution is to build up the stretcher in several pieces. The stretcher is glued up from thinner stock. I cut a groove down the middle of each piece, as shown in the box at the bottom of the opposite page. Then to keep the halves aligned I cut a spline to fit the center of the groove.

At the drill press, drill the holes for the cross dowels (box on the opposite page). In addition, you can drill the holes and install threaded inserts in the stretchers (detail 'g,' facing page). Later, these inserts are used for installing the drawer cases.

THE TOP. The advantage of building the base of the bench first is that it gives you a place to work on the top. For this bench, I made the top from laminated strips of hard maple. The color of the wood provides a light background for detailed work. Laminating the top orients the more durable edge grain up.

In order to keep the process manageable, I only glued up a few strips at a time, as shown in the main drawing at right. This allows the glued up sections to fit through my planer. The large sections can be assembled into the full benchtop.

CUTOUT. To create the cutout at the front of the benchtop, you'll start by using a drill to establish the radius at the inside corners (lower middle drawing). After rough-cutting the shape with a jig saw, you can use a template and a router with a flush-trim bit to clean things up.

The template is shown in detail 'a.' It covers slightly more than half of the cutout. It's clamped to the benchtop along the layout lines. A pattern bit in a hand-held router follows the edge of the template to clean up the edge (lower right drawing). To rout the other side of the cut out, I flipped the benchtop over and clamped the template to the bottom face. In this orientation, the router will be cutting downhill to the grain for a smooth result.

DOG HOLES. You may want to add bench dog holes in the top, as in detail 'a.' These accept stops, vises, dogs and other fixtures to make your work easier.

In order to attach the top to the base, threaded inserts are installed in the top that align with the holes in the upper rails. Center the top side-to-side and flush with the legs at the back. Then you can mark locations for the inserts through the holes in the upper rails (details 'b' and 'c').

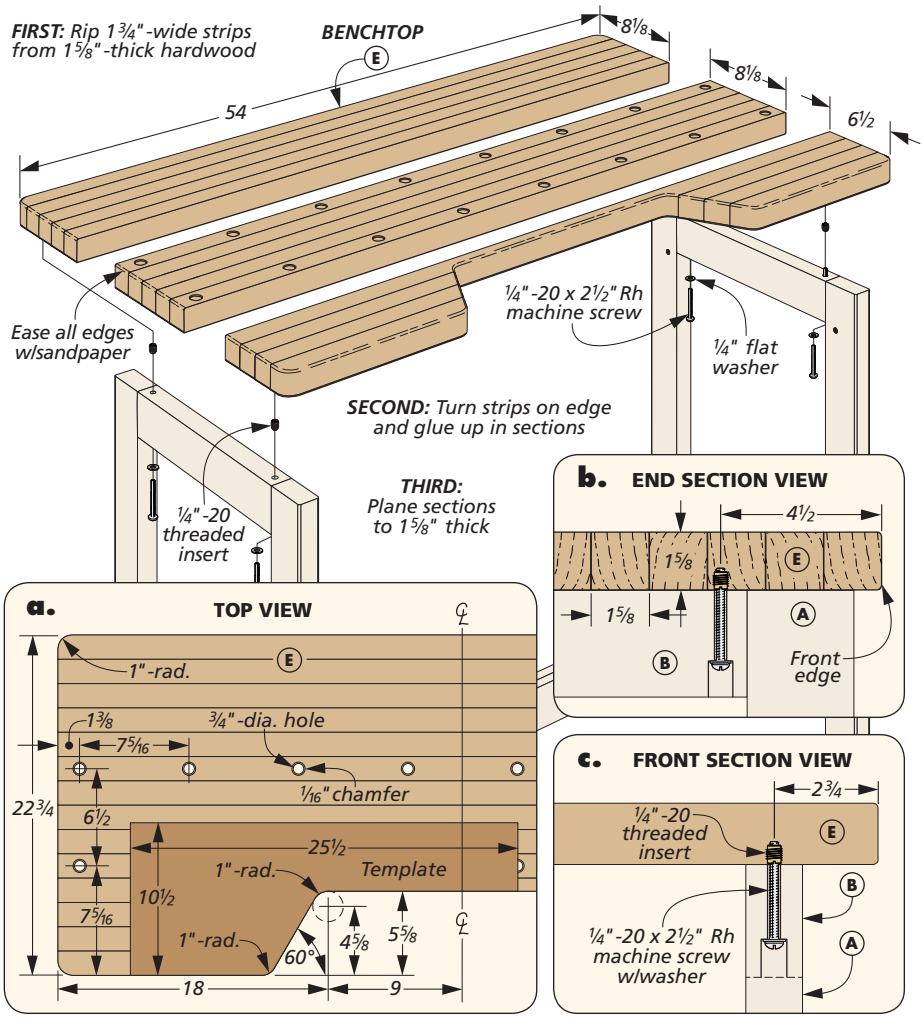

How-To: CREATE THE BENCHTOP

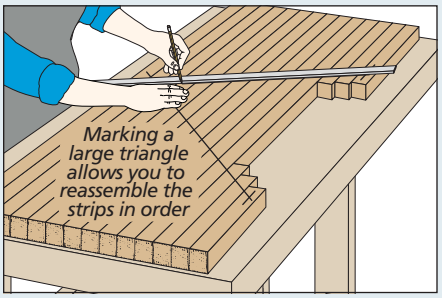

Careful Arranging. Lay out the strips for a pleasing grain and color match. Short strips define the cutout at the front.

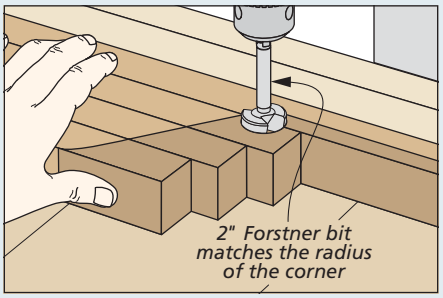

Inside Corner. Use a Forstner bit to create a smooth transition on the inside corner. Then rough cut it with a jig saw.

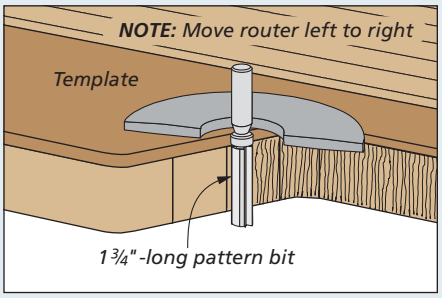

Flush Trim Edges. A long pattern bit following a half-template leaves a smooth edge in its wake.

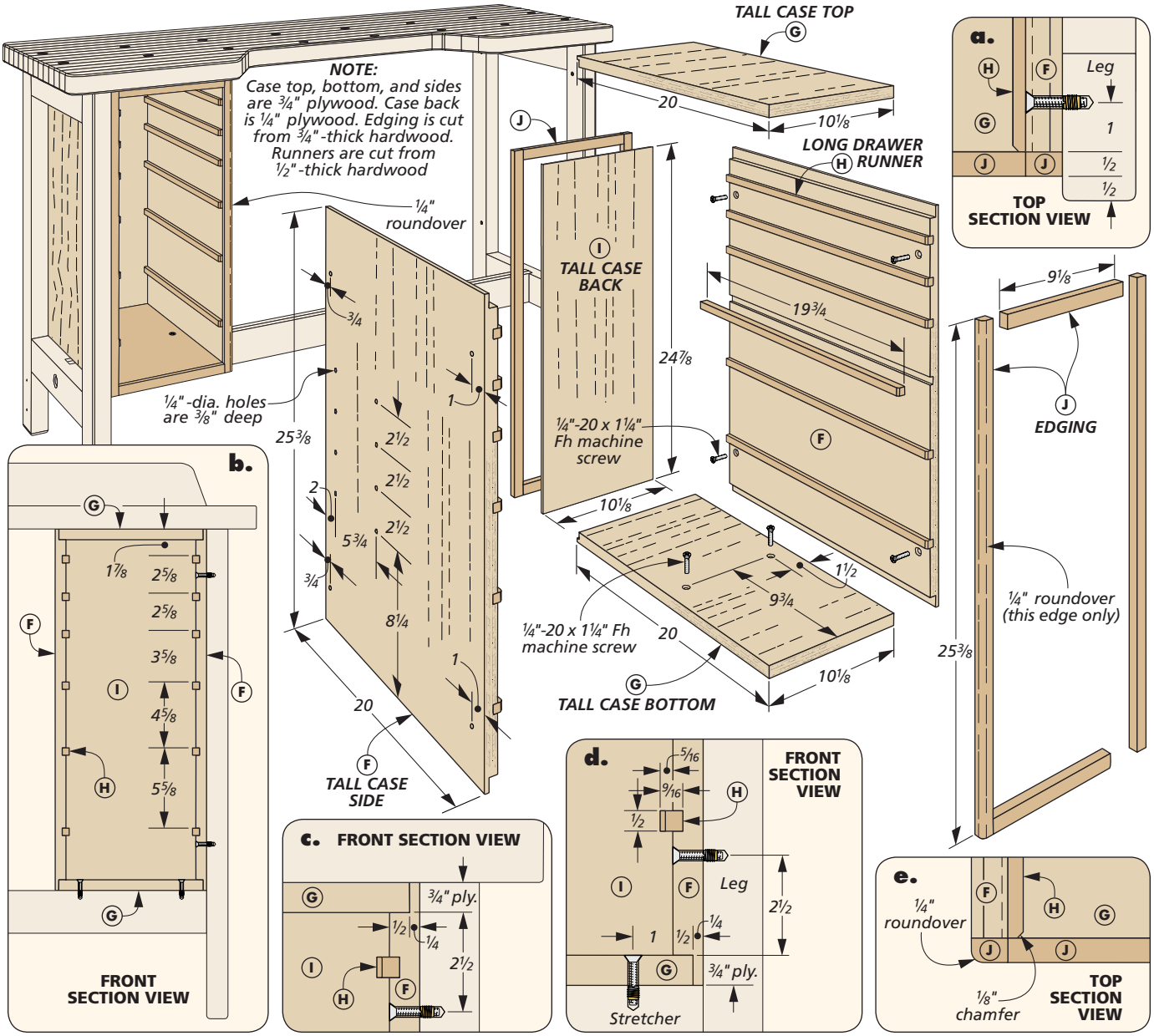

Drawer **CASES**

As it stands, the completed base and benchtop would make a fine workbench. However, the space inside the framework of the bench base is ideal for adding some storage.

So I built three cases to house a number of drawers. There's a wide, shallow center drawer flanked by two banks of smaller drawers. On these two pages, I'll tackle the cases. The following pages will detail the construction of the drawers that fit inside.

PLYWOOD CONSTRUCTION. I took a different tack for making the drawer cases. While the base and top of the bench are made from hardwood, I used plywood for the drawer cases. Plywood makes it easy to create the large panels that are necessary. All you need to do is cut them to size.

Cutting up large sheets of plywood can be a challenge. You'll find some handy tips and techniques to make it easier on your back on page 58.

When cutting the drawer case sides to size, I paid particular attention to their length. My aim was to have the sides slide between the stretcher and underside of the benchtop without being too tight or showing gaps.

RABBET JOINERY. For the joinery in all three cases, I used rabbets. This joint creates a shoulder to register parts for assembly, but is simple to cut at the table saw. The sides have rabbets cut along the ends to hold the top and bottom.

You can see the setup I used in the box on the opposite page. The key is making a few test cuts so that the amount of the dado blade that's exposed matches the thickness of the plywood, which is generally less than the stated thickness (¾").

DADOES & RABBET. Spaced along the sides, I cut a series of dadoes. These hold side-mounted drawer runners, as in the middle drawing below. The dimensions for locating these dadoes is shown in detail 'b' on the opposite page.

Each drawer case has one more joint that you need to cut (lower right drawing). And that's a narrow rabbet along the rear of all four pieces to hold a back.

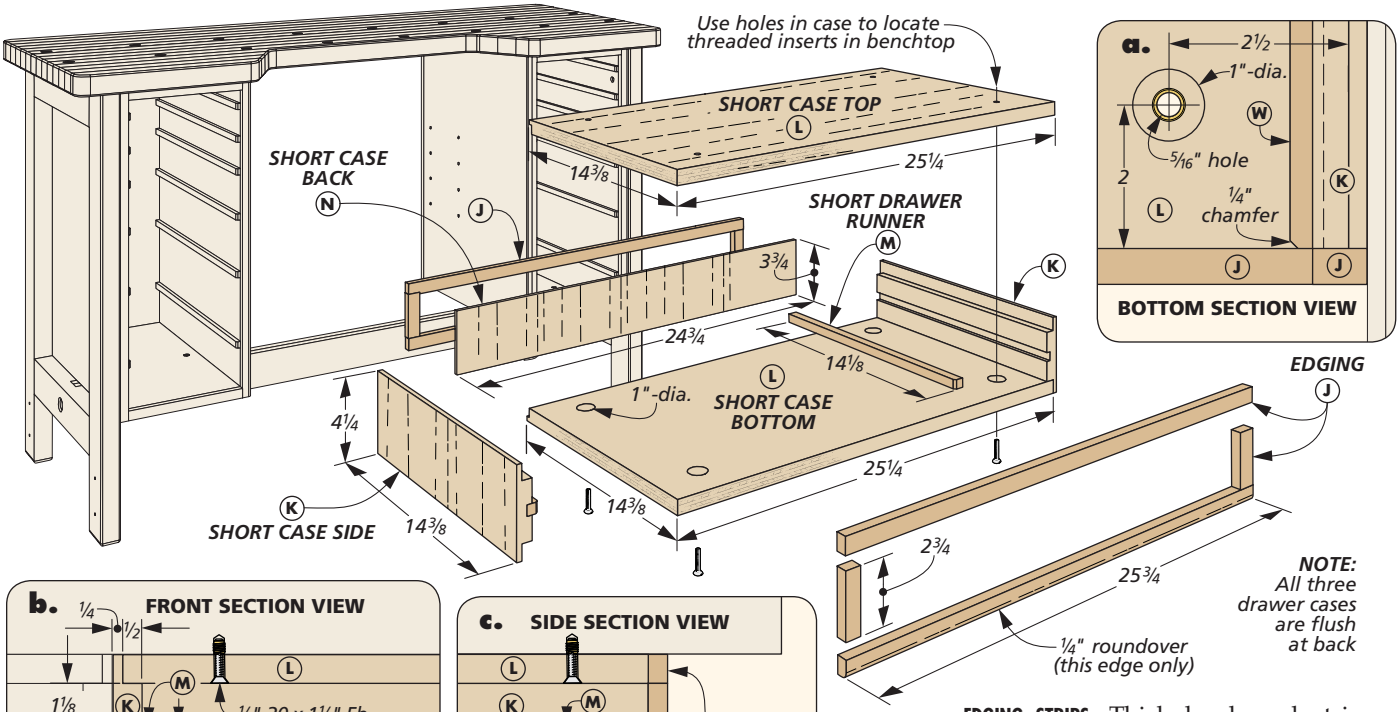

DRILL HOLES. I also took the time to drill a few holes that will be used to attach the cases to the legs and stretchers of the workbench. It's a good idea to double-check your layout to make sure the holes will align with the threaded inserts. These holes are shown in details 'a,' 'c,' and 'd' on the opposite page.

While at the drill press, you can take care of another detail. That's to drill a set of shelf pin holes on the inner case sides. These support a shelf that stretches between the drawer cases in the knee space of the hobby bench.

DRAWER RUNNERS. Now is a good time to cut the drawer runnsers to size. I added a small chamfer on the front edge to help guide the drawer into the opening. Glue the drawer runners into the dadoes. Once that's taken care of, assemble the cases. Be on the lookout to keep the case square and prevent the sides from bowing in or out. I set the back panel in place (without glue) to assist with this.

EDGING STRIPS. Thick hardwood strips conceal the plywood edges at the front and back of the cases. A roundover softens the inside piece of edging (detail 'e', opposite page). You can glue the front edging to the cases, but leave the back edging and back panels off until you fit the drawers into the case later.

CENTER CASE. There are a couple of items to note in building the center case. I drilled large access holes in the case bottom (details 'b' and 'c'). The holes make it easy to reach the screw heads with a long driver when you attach this case to the underside of the benchtop. Second, you need to round over the lower strip of edging, as in detail 'c.' All three cases can be fastened in place with screws.

How-To: CASE RABBETS & DADOES

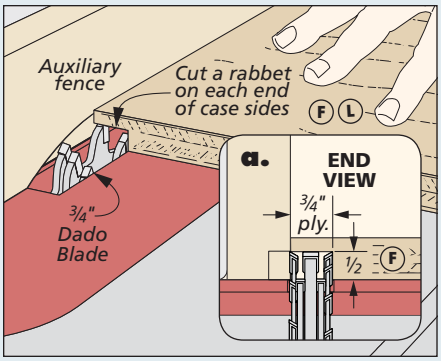

Top & Bottom Rabbets. An auxiliary fence on the rip fence allows you to recess the dado blade to dial in an exact width.

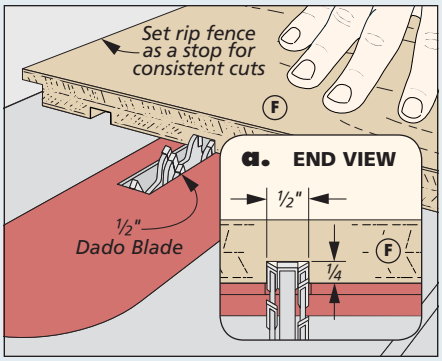

Cut Dadoes. Reset the dado blade and cut dadoes across the side panels to hold hardwood drawer runners.

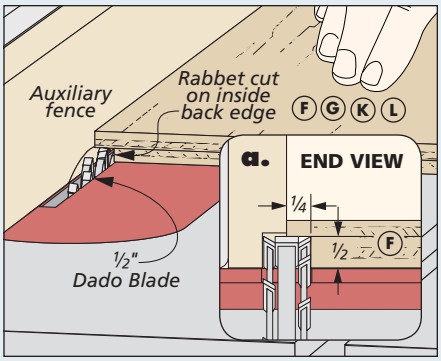

A Narrow Rabbet. The back panel of each case rests in a rabbet cut in the top, bottom, and sides.

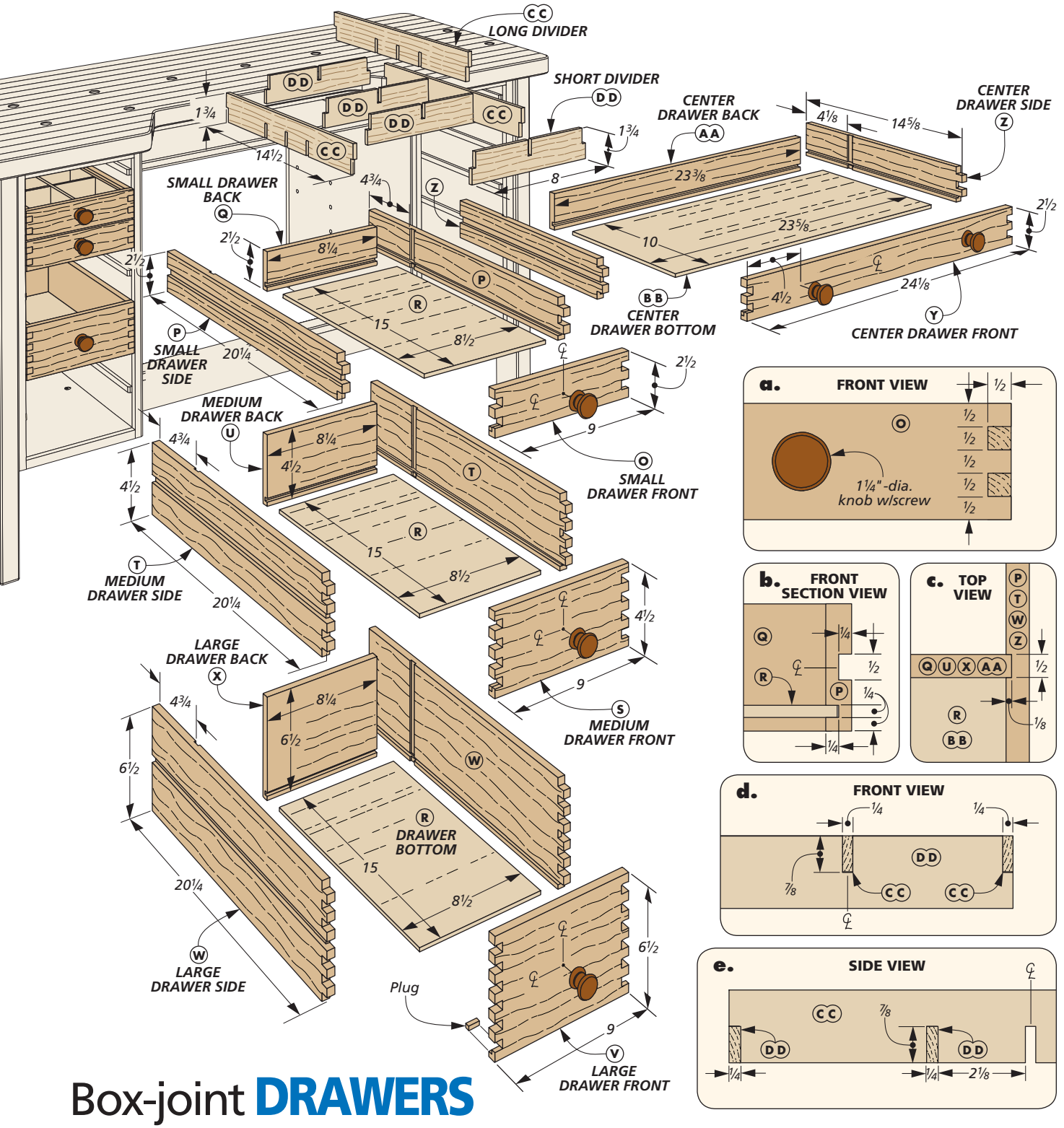

Box-joint **DRAWERS**

Your task now is to fill the cases you just made with drawers. The detail that catches your eye right off the bat is the box joints at the front of the drawers. The alternating pins and slots add a classic touch to the workbench.

TOTAL ACCESS. Behind the box joints, there's one other detail that deserves some mention. You'll notice in the drawing above that the drawer back is inset from the end of the sides. While it may look odd at first, the purpose behind it is to provide full access to the drawer without having to pull it all the way out.

In a typical drawer construction, the drawer will tip out of its opening the farther you pull it out. Here, the extended sides still support the drawer, holding it up even as you pull it out to grab items in the back of the compartment.

PRODUCTION MODE. There are four different sizes of drawers to build for the workbench. However, all the joinery (box joints, dadoes, and grooves) is identical. So you can crank out the joints assembly-line style.

That being said, it pays to devote a little time to accurately sizing parts and fine-tuning the setup of your box joint jig. These two factors govern the final look of

the drawers. What you're shooting for is to end up with drawers that have a consistent size in the pins and slots and even gaps around each of the drawers. The box at right steps you through the process involved for making each drawer. And you can find even more box joints tips in the article on page 50.

BOX JOINTS FIRST. After sizing the parts, I cut the box joints at the front of the drawer first (Figures 1 and 2). These are pretty simple to cut with a basic table saw jig. Be sure to keep consistent pressure on the workpieces in order to get the best results.

SIDE GROOVE. The next order of business is cutting a groove on the outside of the drawer side to fit over the runner in the case. The key here is aligning the groove with the middle slot on the drawer side (Figure 3). This way it creates a gap and doesn't affect the look of the box joints. And the drawer front serves as a stop for the drawer.

BACK DADOES. Figure 4 shows the setup for cutting the dadoes in the drawer sides that house the drawer back. I used the rip fence as an end stop for consistent placement. And an auxiliary fence on the miter gauge prevents tearout as the blade exits the cut.

A SMALLER GROOVE. The final joint to cut is the groove that accepts the drawer bottom. This is shown in Figure 5. The groove is cut in all the drawer parts. Cutting the groove results in a small gap in each end of the drawer front. I fill these with small plugs after assembly.

GLUE UP THE DRAWER. Speaking of assembly, it's time to bring all the parts of the drawer together. Figure 6 shows the order I used. For a good fit in the case, make sure the drawer is clamped square and rests flat as the glue dries.

When the clamps come off, you can slide the drawers into the case. If needed, sand or plane the runners for a smooth-sliding fit. When you're satisfied, you can glue the drawer case backs into place and attach the rear edging strips.

DIVIDE & CONQUER. The upper drawers are a natural fit for storing small items. To organize the space even more, I added interlocking gridwork. These dividers are notched to create eight openings.

Figures 7 and 8 show how to cut the half-lap joinery. I sized the strips for a press fit in the drawer. To change the arrangement as needed, it's a good idea to install the gridwork without glue.

How-To: DRAWERS & DIVIDERS

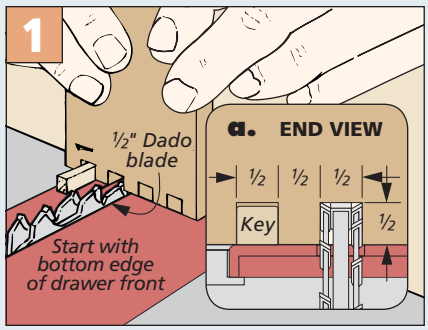

Drawer Front. After cutting the first slot, hop the workpiece over the key to make each successive slot.

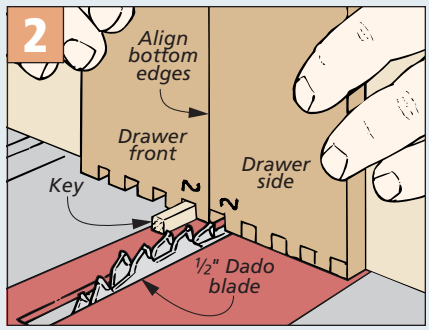

The Sides. The front is used as a spacer to cut a slot in the sides. Remove the front to cut the rest of the slots.

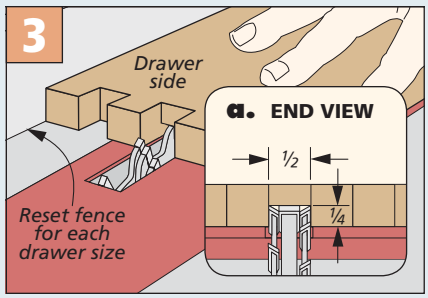

Runner Groove. Carefully align the dado blade with the center slot to cut the groove for the drawer runner.

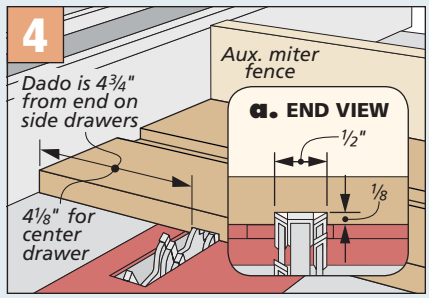

Dado Accepts the Back. You only need to cut a shallow dado to capture the back in the drawer sides.

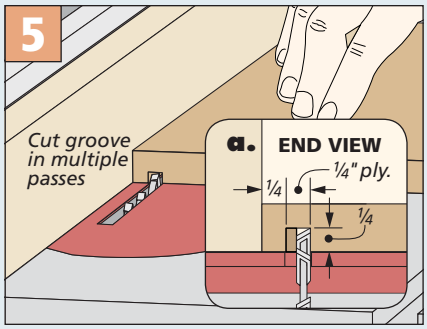

At Last, a Groove. In order to get a good fit with the plywood bottom, cut the groove with a regular blade.

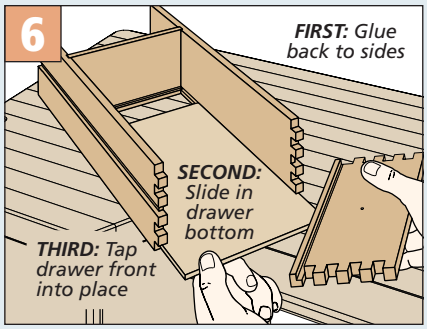

Drawer Assembly. Once the drawer is glued up, check to make sure the assembly is flat and square.

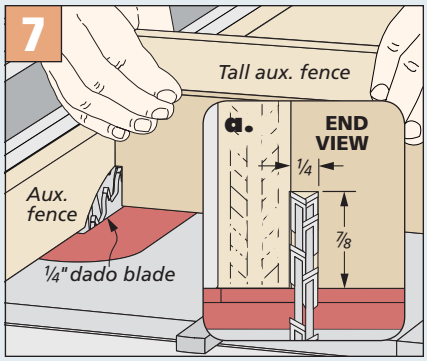

End Laps. The setup to cut the lap joint on the ends of the grid is very similar to cutting a rabbet.

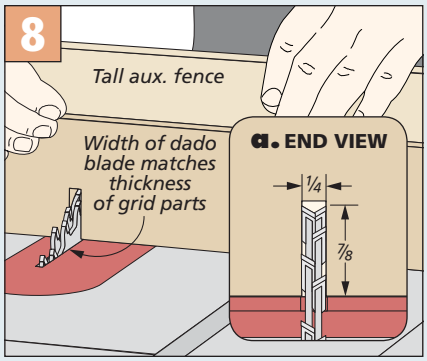

Half-Lap Slots. Use the rip fence as a stop to consistently position the slots in each of the grid dividers.

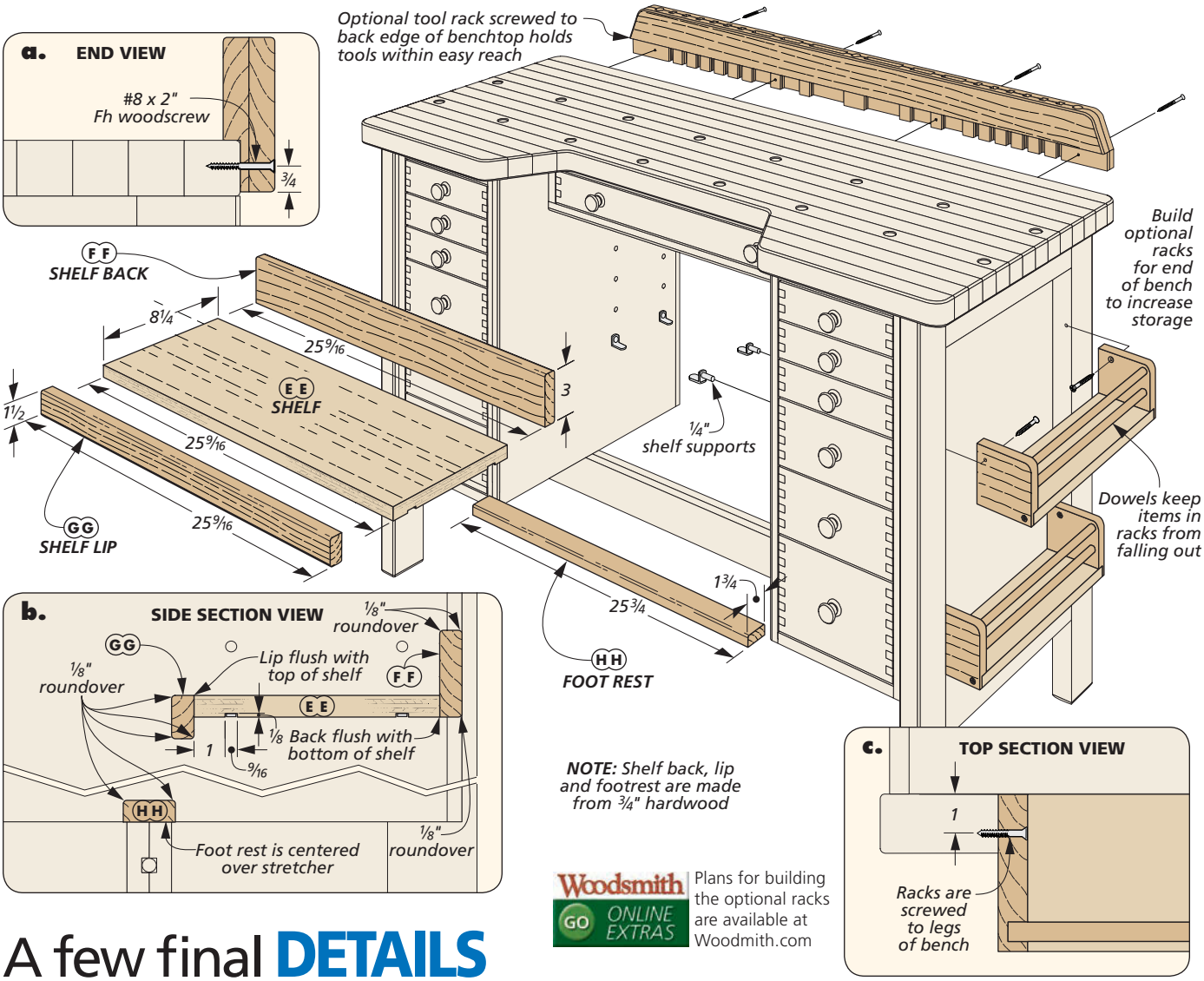

Woodsmith GO ONLINE EXTRAS Plans for building the optional racks are available at Woodmith.com

A few final **DETAILS**

There are two other components left to make — a shelf and a foot rest. The shelf takes advantage of the space between the drawer cases along the back of the bench. The foot rest provides a wider surface for your feet if you are sitting at a stool while enjoying your pastime. As you can see, neither of these is difficult to make.

THE SHELF. The shelf rests on supports that fit in the holes you drilled earlier in the large cases. But I wanted something a little more than a simple panel. For starters, there's a tall hardwood back to keep items from falling off the back of the shelf (detail 'b'). A narrower lip along the front is flush with the shelf. Both pieces stiffen the shelf and dress up the look. I cut shallow grooves on the bottom of the shelf to register on the shelf pins (lower left box).

FOOT REST. The foot rest is dirt simple. The only detail to note is a roundover to ease the sharp upper edges, as shown at left. Then it's centered on the stretcher and glued into place.

By this point, I'm sure you're eager to get your new bench set up and start using it. However, you may want to take the time to add the tool rack and end racks shown in the drawing above. Depending on what you plan to use the workbench for, you could build these accessories to pack even more storage space into this project. You'll find plans on our website at *Woodsmith.com*.

How-To: BUILD THE CENTER SHELF

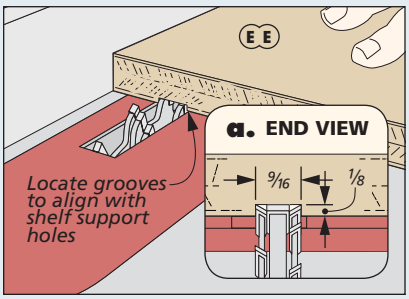

Shelf Supports. Shallow grooves in the bottom of the shelf keep it from sliding off the supports.

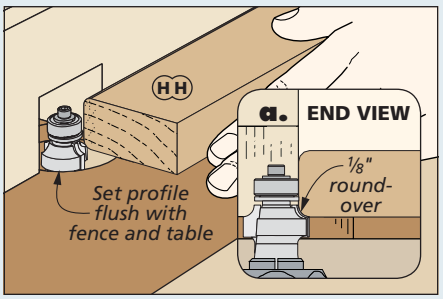

Roundover Eases Edges. A small radius is all that's needed to soften the shelf back, lip, and foot rest.

Materials, Supplies & Cutting Diagram

A	Legs (4)	1½ x 3 - 34⅜
B	Rails (4)	1½ x 3 - 19
C	Stretcher (1)	1½ x 3 - 48
D	Spline (1)	½ x ½ - 36
E	Bench Top (1)	1⅝ x 22¾ - 54
F	Tall Case Sides (4)	¾ ply. - 20 x 25⅜
G	Tall Case Tops/Bots. (4)	¾ ply. - 20 x 10⅛
H	Long Drawer Runners (24)	½ x 9/16 - 19¾
I	Tall Case Backs (2)	¼ ply. - 10⅛ x 24⅞
J	Edging	¾ x ½ - 396 rgh.
K	Short Case Sides (2)	¾ ply. - 14⅜ x 4¼
L	Srt. Case Top/Bot. (2)	¾ ply. - 14⅜ x 25¼
M	Short Drawer Runners (2)	½ x 9/16 - 14⅛
N	Short Case Back (1)	¼ ply. - 24¾ x 3¾
O	Small Drawer Fronts (6)	½ x 2½ - 9
P	Small Drawer Sides (12)	½ x 2½ - 20¼
Q	Small Drawer Backs (6)	½ x 2½ - 8¼
R	Drawer Bottoms (12)	¼ ply. - 15 x 8½
S	Med. Drawer Fronts (4)	½ x 4½ - 9
T	Med. Drawer Sides (8)	½ x 4½ - 20¼
U	Med. Drawer Backs (4)	½ x 4½ - 8¼
V	Lg. Drawer Fronts (2)	½ x 6½ - 9
W	Lg. Drawer Sides (4)	½ x 6½ - 20¼
X	Lg. Drawer Backs (2)	½ x 6½ - 8¼
Y	Center Drawer Front (1)	½ x 2½ - 24⅛
Z	Center Drwr. Sides (2)	½ x 2½ - 14⅝
AA	Center Drawer Back (1)	½ x 2½ - 23⅜
BB	Center Drawer Bot. (1)	¼ ply. - 10 x 23⅝
CC	Long Dividers (18)	¼ x 1¾ - 14½
DD	Short Dividers (24)	¼ x 1¾ - 8
EE	Shelf (1)	¾ ply. x 8¼ - 25 9/16
FF	Shelf Back (1)	¾ x 3 - 25 9/16
GG	Shelf Lip (1)	¾ x 1½ - 25 9/16
HH	Foot Rest (1)	¾ x 1¾ - 25¾

- (20) ¼"-20 Threaded Inserts
- (16) ¼"-20 x1¼" Fh Machine Screws
- (4) ¼"-20 x 2½" Rh Machine Screws
- (4) ¼" Flat Washers
- (2) ½"-13 Bench Bolts & Nuts
- (14) 1¼" Knobs (Oil-Rubbed Bronze)
- (4) ¼" Shelf Supports

1¾"x 6½"- 72" Red Oak (6.5 Bd. Ft.)

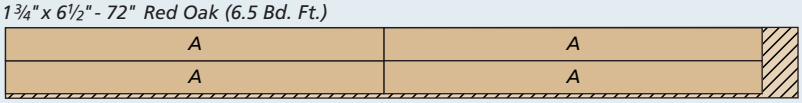

1¾"x 8¾"- 84" Hard Maple (Two Boards @ 10.2 Bd. Ft. Each)

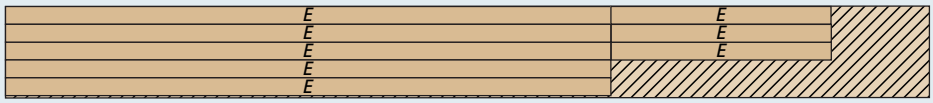

1¾"x 4"- 84" Red Oak (4.7 Bd. Ft.)

¾"x 7"- 84" Red Oak (4.1 Bd. Ft.)

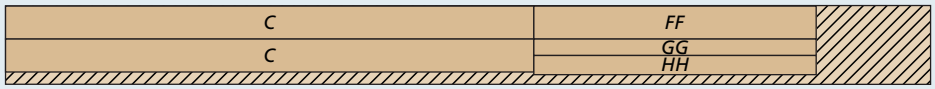

¾"x 3½"- 84" Red Oak (2 Bd. Ft.)

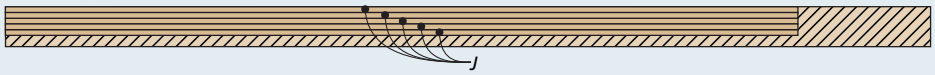

½"x 7¼"- 84" Red Oak (4.2 Sq. Ft.)

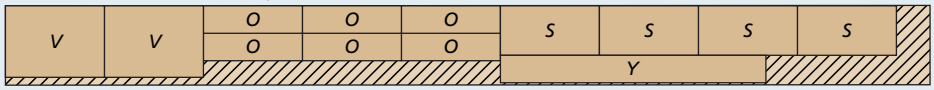

½"x 6"- 84" Hard Maple (Two Boards @ 3.5 Sq. Ft. Each)

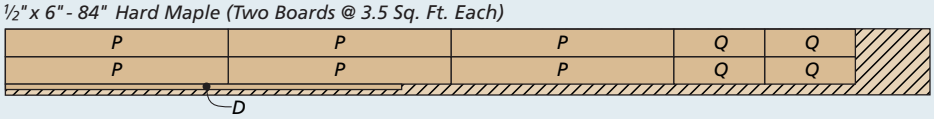

½"x 8"- 84" Hard Maple (4.7 Sq. Ft.)

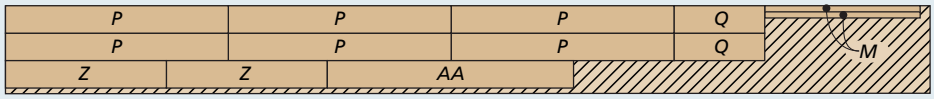

½"x 7"- 84" Hard Maple (Two Boards @ 4.1 Sq. Ft. Each)

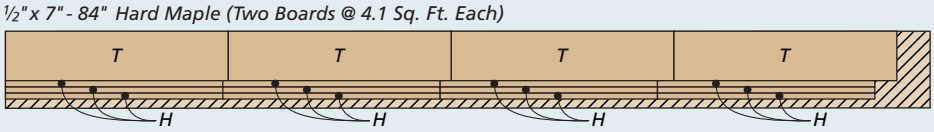

½"x 7"- 84" Hard Maple (4.1 Sq. Ft.)

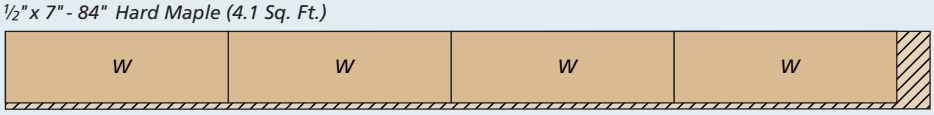

½"x 7"- 60" Hard Maple (2.9 Sq. Ft.)

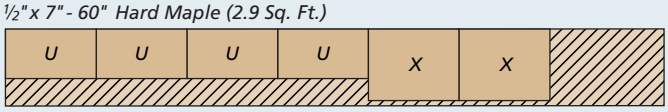

¼"x 6"- 84" Maple (Two Boards @ 3.5 Sq. Ft. Each)

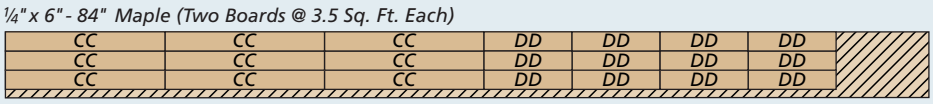

ALSO NEEDED: *Two 48" x 96" sheets of ¾" oak plywood*
One 48" x 48" sheet of ¼" oak plywood

Heirloom Project

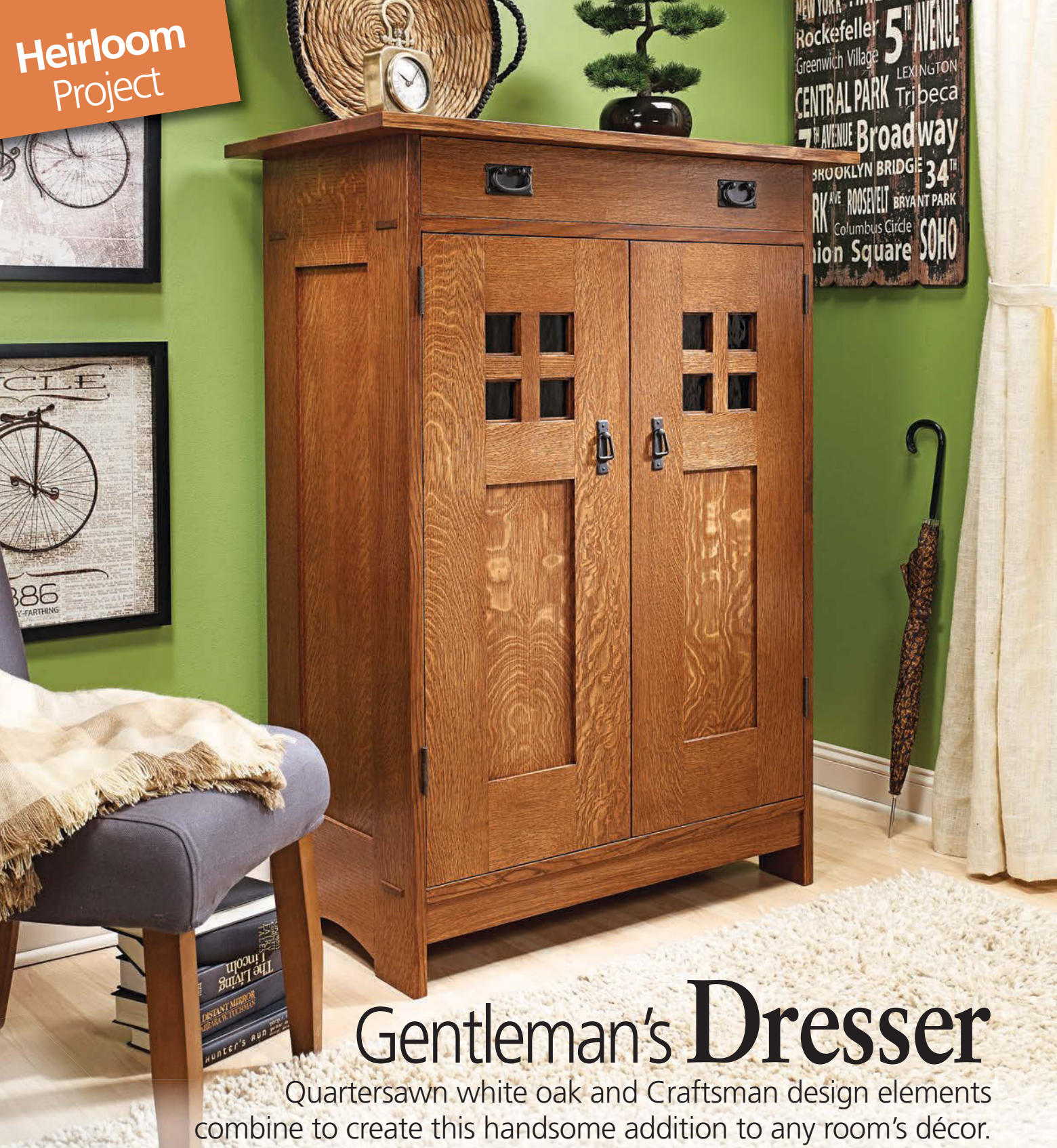

Gentleman's Dresser

Quartersawn white oak and Craftsman design elements combine to create this handsome addition to any room's décor.

If there's a piece of furniture that stands proud with a look of masculinity, it's this dresser. The beefy, solid-wood construction plus, features like the door grids and plugs that simulate through-tenons, creates a stately example of fine furniture.

EASY JOINERY. Classic woodworking joinery makes this project manageable in your shop with basic power tools. The case is made with frame and panel construction on the sides, doors, and back. This theme continues inside with the web frames and divider. Strong tongue and dado joinery is reinforced with screws to lock everything together into a solid unit.

LOTS OF STORAGE. Inside the great-looking cabinet, you'll find plenty of storage with adjustable shelves. A pair of pull-out trays are ideal for corralling smaller items.

As if that weren't enough to pique your interest, details like opaque stained glass and Craftsman-style hardware make this piece stand out in any room of your home.

Construction Overview / *OVERALL DIMENSIONS: 42"W x 56"H x 22"D*

Top is secured to case sides with screws

Faux tenon plugs conceal screws used to assemble cabinet

Tongue and dado joinery secures bottom and divider assemblies

Door grid forms rabbets for installing stained glass

Drawer and trays feature dovetail joinery

Trays rest on adjustable shelves

Bookmatched panels resawn from thicker stock

Classic hardware complements the Craftsman style

Doors, case sides, and back made with stub tenon and groove joinery

NOTE: All case components are made from quartersawn white oak

Plugs fill grooves in stiles

▲ Faux tenons add to the classic Craftsman-style look. They hide the screws used for assembly.

▲ The shadow lines and stained glass details in the door grids add eye-catching appeal.

▲ Sliding trays sit on any of the adjustable shelves to create a flexible storage solution.

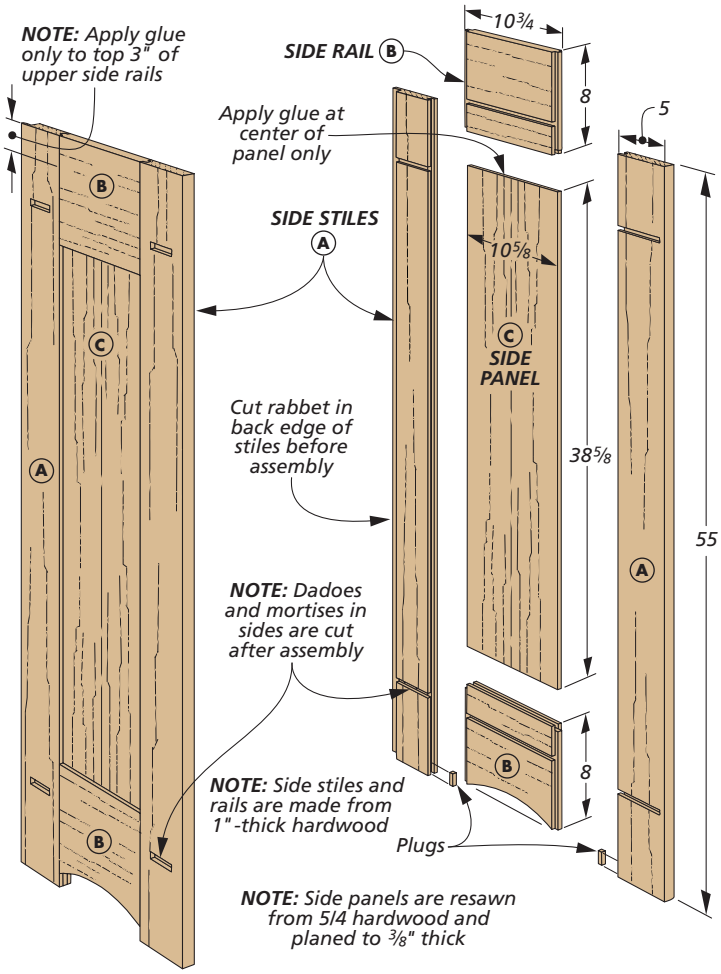

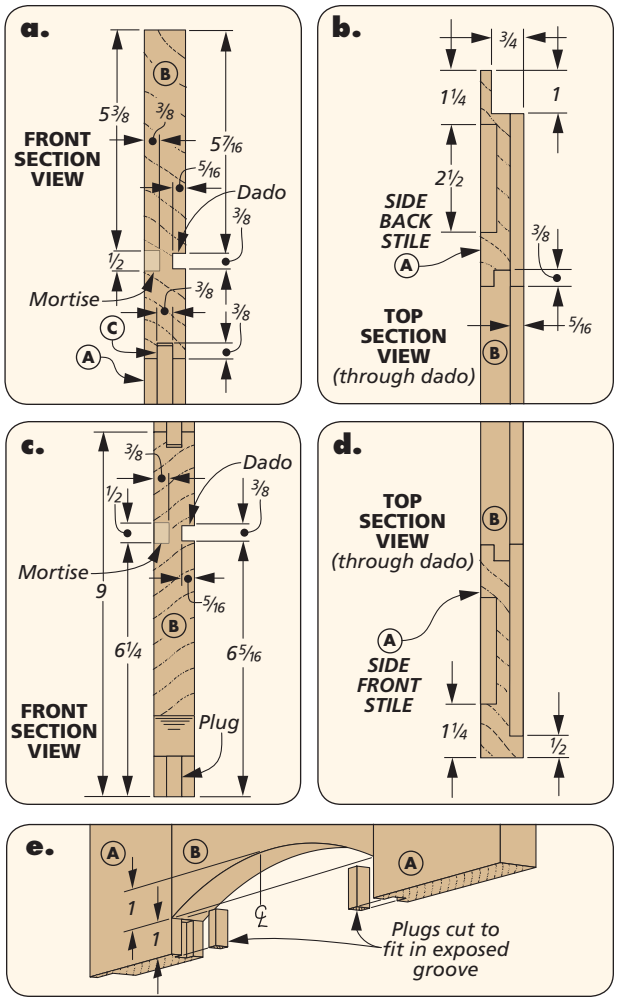

Assembling the SIDES

Before you get started on building the gentleman's dresser, there's a little prep work to be done. First of all, most of the parts are made from 5/4 stock planed to 1" thick. The panels in the cabinet sides, back, and doors are resawn from 5/4 stock and planed to ⅜" thick. You'll want to keep track of the panel parts — they're bookmatched to create eye-pleasing panels (more on this later). The bottom line is, it's a good idea to get all of your stock planed to thickness first.

CASE SIDES. I started construction with the frame and panel sides of the case. The box below shows the process of resawing the panels at the band saw and bookmatching for the best grain match. For this task, use a wide blade designed

How-To: RESAW, BOOKMATCH & PLANE PANELS

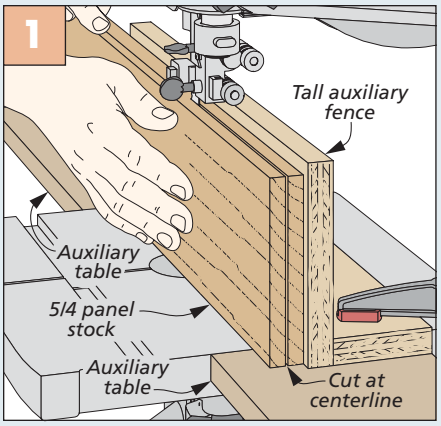

Resawing for Panels. A tall fence and wide blade help ensure straight, consistent cuts when resawing.

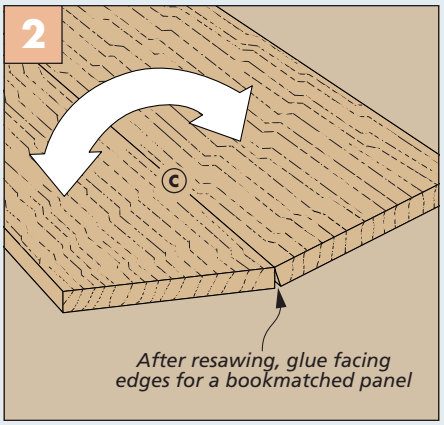

Bookmatch. After taking the pieces off of the band saw, open them up like a book to ensure matching grain.

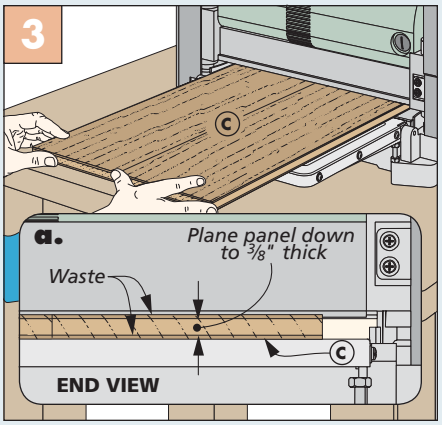

Plane to Thickness. Once the panels are glued up, plane both sides, sneaking up to a final thickness of ⅜".

for resawing. Adding a tall auxiliary fence helps ensure straight cuts.

I glued up the panels before planing them to their final 3/8" thickness. You can set the panels aside for now as you start to work on making the rails and stiles.

FRAME JOINERY. The How-To box on the right steps you through the tasks necessary to complete each side assembly. After cutting the rails and stiles to size, cut centered grooves on the inside edges (Figure 1). The width of the groove should match the panel thickness.

In Figure 2, you can see how I used a dado blade and auxiliary rip fence on the table saw to cut the stub tenons on the rails. Flip the workpiece after each cut to keep the tenon centered. Sneak up on a snug fit in the stile's groove.

The last operation to perform on the two rear stiles is a wide rabbet along the back, inside edge (Figure 3). The back assembly fits into these rabbets.

CURVED BOTTOM RAILS. Figures 4 and 5 illustrate laying out and then cutting the curved bottom rail. At this point, you're almost ready for glueup. I stained the panels first (refer to Sources, page 67). This way, bare wood won't show along the edges if the panels shrink a little during times of low humidity.

Figure 6 and detail 'e' on the opposite page show you how to locate and glue the lower rail into the side assembly. Only gluing the bottom few inches of the lower rail tenons and top few inches of the upper rail tenons allows them to move with changes in humidity without stressing the joints.

I used spacers to fill the rabbets in the stiles to provide a clamping surface. As the glue sets up, cut small plugs to fill the exposed grooves at the bottom.

STOPPED DADOES. The top and bottom web frames of the case are attached to the sides using tongue and dado joinery. Figure 7 shows a simple jig for routing the dado. Plans for building the jig are provided on page 66.

MORTISES. To help hold the large case assembly together during glueup, screws are installed through mortises in the case sides. Faux tenons will be added later to hide the screws.

For locating and sizing the mortises, I used a simple router jig, as in Figure 8. Find out how to build and use it in Shop Notes on page 66.

How-To: CUT GROOVES, DADOES & MORTISES

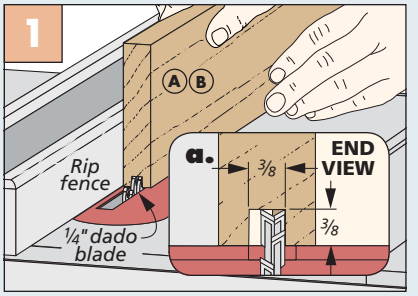

Centered Grooves. Flip the workpiece end for end after the first pass to obtain a 3/8"-wide groove.

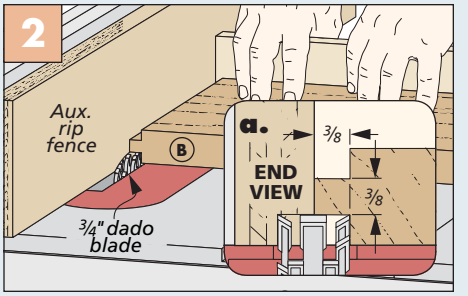

Stub Tenons. By using a dado blade with an auxiliary fence, you can cut the tenons on the ends of the rails.

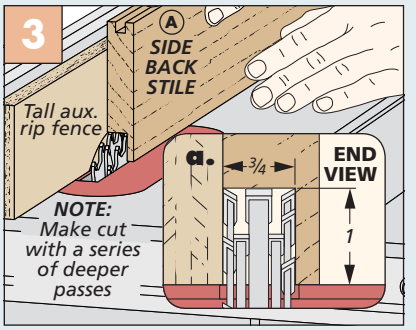

Rabbeted Edge. To accommodate the back panel, cut a wide rabbet by standing the stiles on edge.

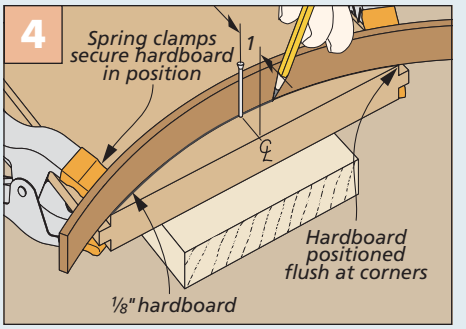

Lay Out an Arc. Use a strip of hardboard to lay out the arc on the bottom rails. Spring clamps and a nail hold it in place.

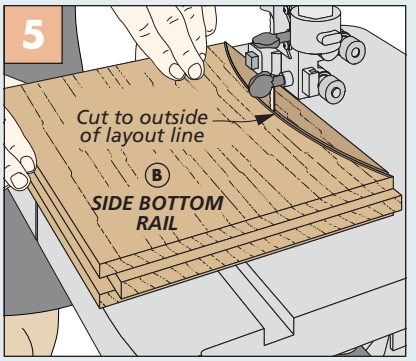

Cutting the Arc. Carefully cut the arc, just leaving the pencil line. Follow up by sanding it smooth.

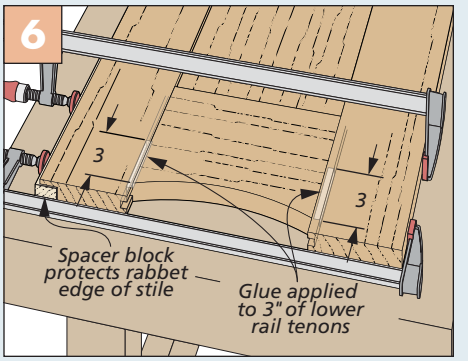

Gluing. Apply glue to the center of the rails. Use spacers to provide a clamping surface along the rabbeted edge.

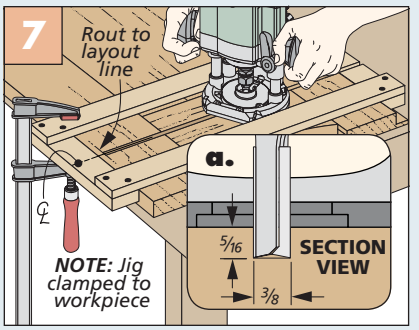

Stopped Dadoes. Rout a stopped dado at the top and bottom on the inside of the side assemblies.

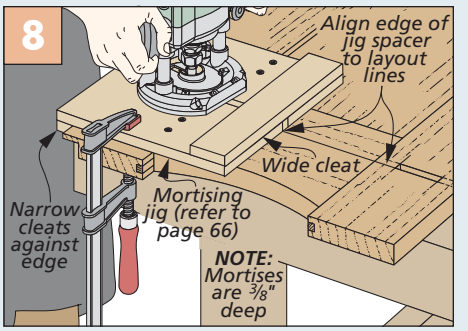

Mortises. With a simple jig and a dado cleanout bit, rout out the mortises then square up the corners with a chisel.

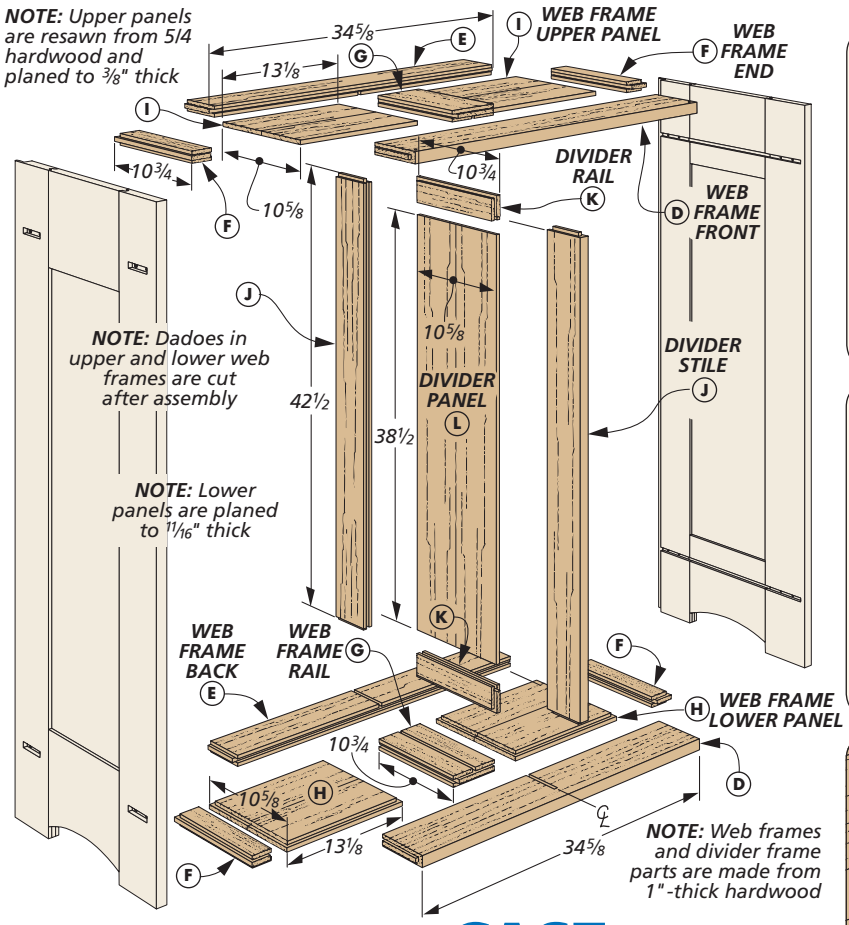

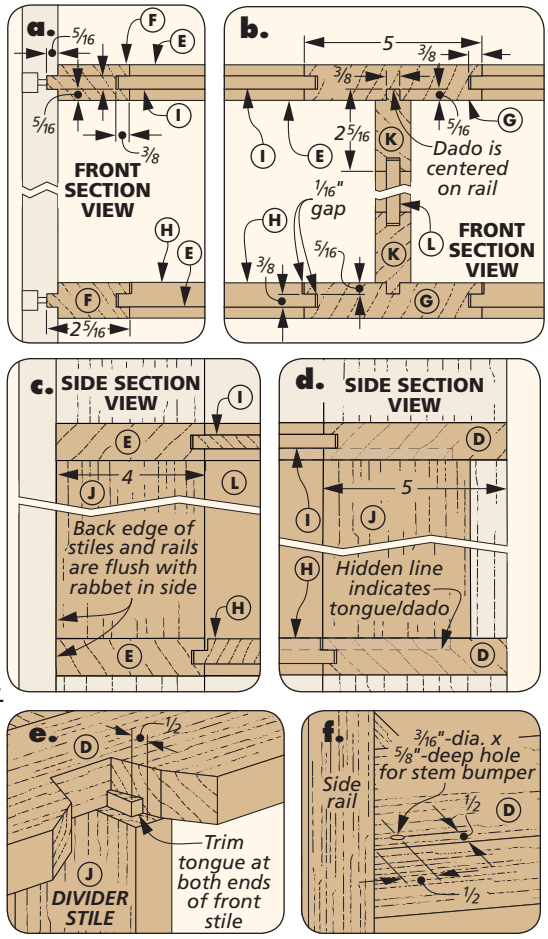

Completing the CASE

Finishing up the case for the dresser involves more frame and panel assemblies. The top and bottom web frames meet up with the dadoes you cut in the sides. Stopped dadoes in the web frames mate up with tongues on the center divider. Later, you'll create a large frame and panel assembly to complete the back. The main drawing above shows how everything goes together to create a strong and sturdy case.

WEB FRAMES. The bottom of the dresser case is made up of a web frame with hardwood panels. These panels are a little thicker than those used in the rest of the assemblies. This way, the top of the panels will be flush with the frame.

So you'll plane the panels to 11/16" thick and form a tongue to fit into the groove in the frame. The panels are sized for a 1/16" gap all around, as shown above. Figures 1 and 2 in the How-To box below show how to cut the groove in the frame parts and a rabbet around the panel to form a tongue. The top web frame is the same except the panels are 3/8" thick (just like the side assemblies).

There are a couple of other steps to complete the web frames. One is to form the tongues on the ends to fit into the stopped dadoes in the case sides. You'll also need to trim back the tongue with a hand saw so the web frames sit flush

How-To: GROOVES, RABBETS & TONGUES

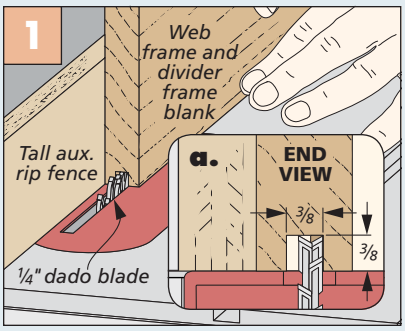

Groove. Use a dado blade to sneak up to a 3/8"-wide groove, flipping the workpiece between passes.

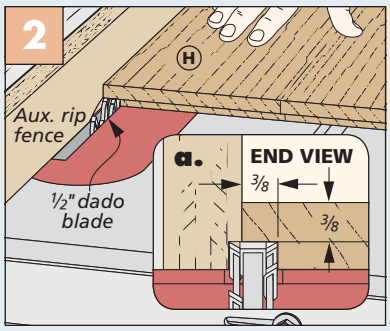

Rabbet Panel. The panels on the bottom web frame are rabbeted so they sit flush with the frame.

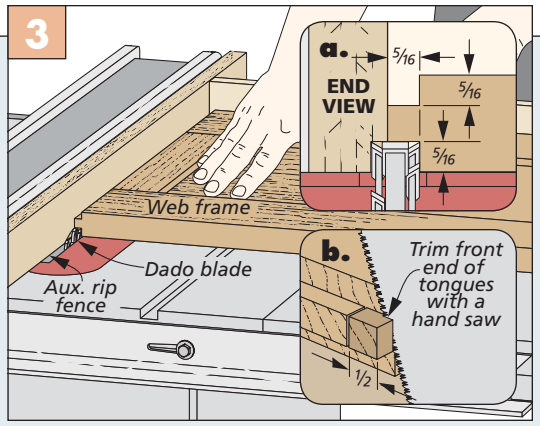

Web Frame Tongues. The web frames have a tongue on each end to mate with the stopped dadoes in the case sides.

with the sides, as shown in Figure 3 at the bottom of the opposite page.

After gluing up the web frames, lay out the stopped dadoes that hold the divider. This dado is cut on the bottom face of the top web frame and on the top face of the bottom frame. I used the same router jig as before (lower left drawing).

You'll build a drawer later, but to make it slide smoothly nylon stem bumpers are installed in the top web frame. It's easier to drill the holes for these before assembly, as in detail 'f,' opposite page.

DIVIDER. After gathering up your clamps, this would be a good time to dry-assemble the sides and web frames. This way, you can size the divider to fit between the pair of web frames.

There's nothing new with making the divider. It's a frame and panel assembly, just like the others. And like the web frames, you'll need to trim the tongues at the front edge (detail 'e,' opposite page).

CASE ASSEMBLY. Since screws secure the web frames through mortises in the case sides, the glue-up process is easier. I glued up the web frames and divider first (lower middle drawing) then inserted this subassembly into one side. After installing the screws (detail 'd' at right), glue and screw the other case side to the web frames.

CASE BACK. You can start to work on the case back. Here, making the panels is a little different than before. You'll probably need to glue up each panel from three boards instead of two. Since they're a part of the back assembly, I didn't worry so much about bookmatching the grain. Instead, I focused more on an overall grain and color match for each of the panels.

Because the width of the finished panels is wider than most benchtop planers, I took extra care during glueup to make sure the boards were flush. Then use a hand plane or sander to get the panels smooth once the glue dries.

Making the frame for the back should be old hat by now. I took some time to dry-fit the parts often to make sure the assembled panel fit tightly to the case without gaps at the edges.

There's a small taper at the bottom of the two outer stiles. This is easy to cut at the band saw (lower right drawing). To smooth out the rough edge, I used a smoothing plane. A few quick passes should do the trick.

To attach the back, simply glue it into the rabbeted stiles of the case sides. Apply clamps to draw it tight to the case.

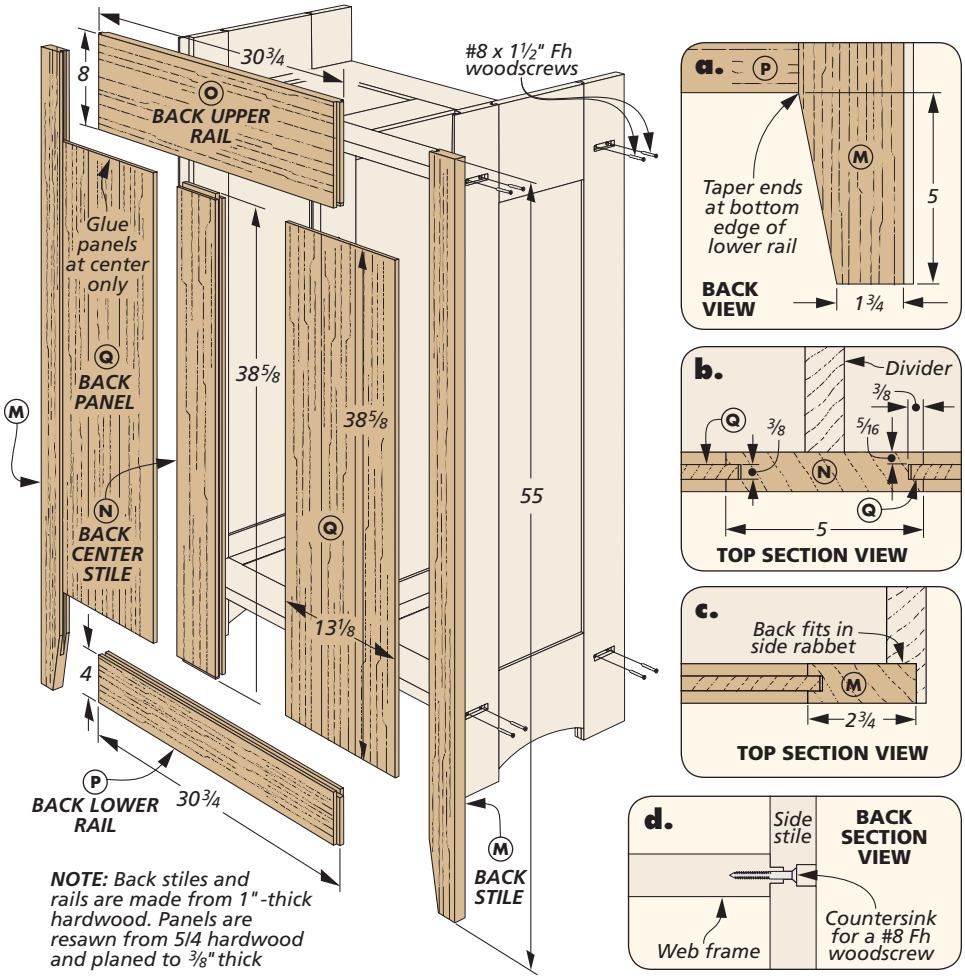

How-To: ADD THE DIVIDER & CUT TAPERS

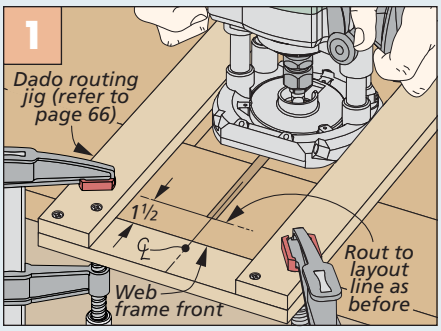

More Stopped Dadoes. The same jig used on the case sides helps to rout stopped dadoes on the web frames.

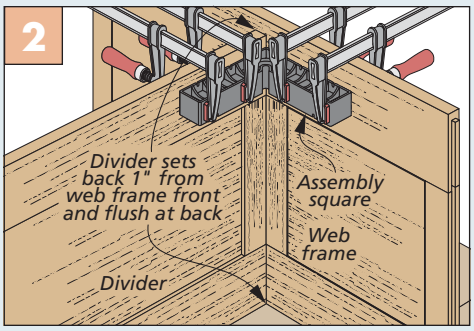

Divider Assembly. Using assembly squares helps keep the web frames square with the dividers during glue-up.

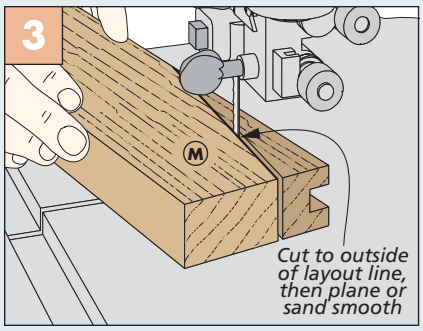

Tapered Stiles. After cutting the grooves, taper the bottom end of the back rails at the band saw.

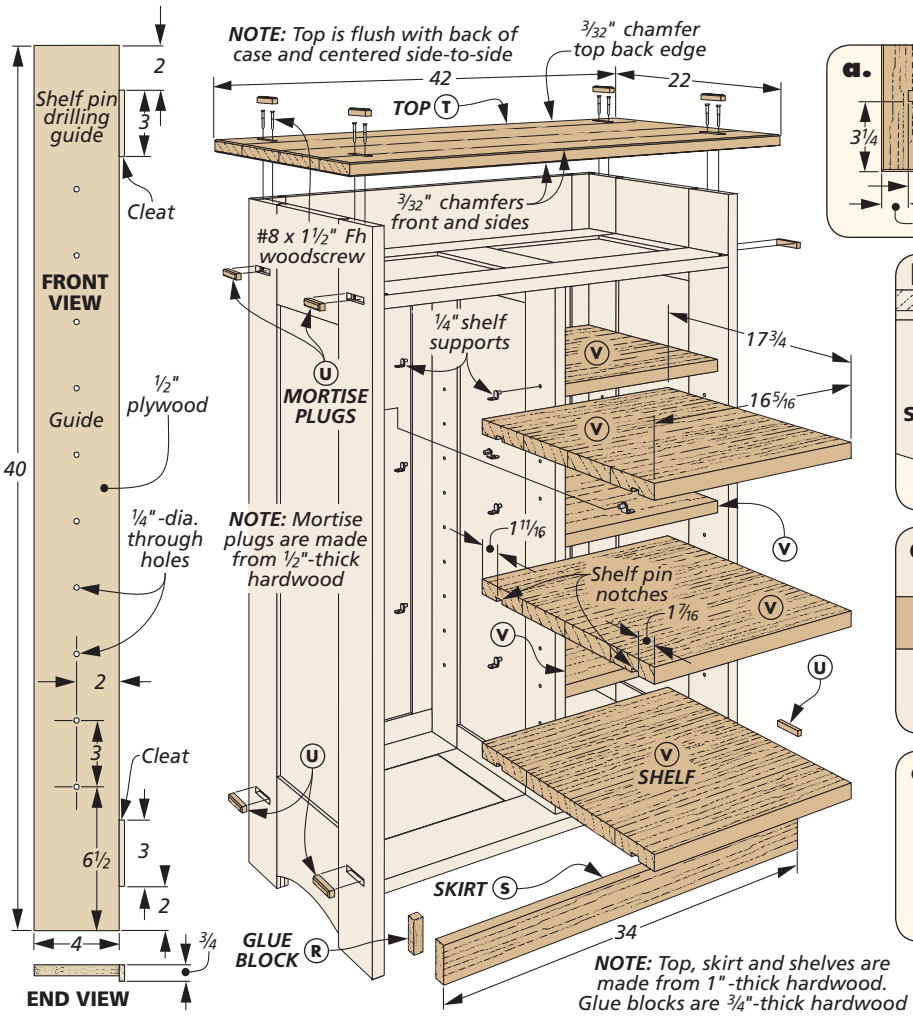

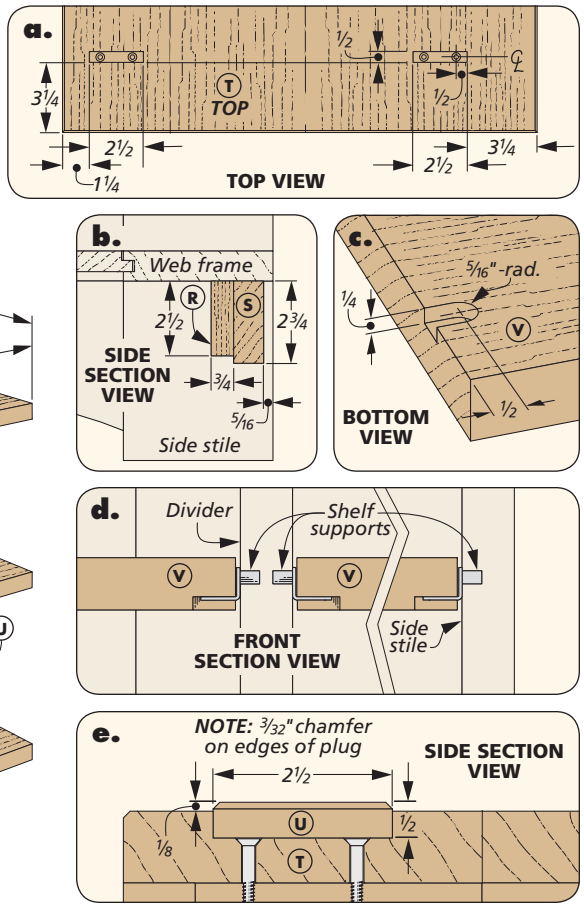

Add the TOP, SHELVES & BINS

You're on your way to finishing up the case of the dresser. The next parts to add are a skirt along the bottom, adjustable shelves, and the top. You'll also plug the mortises with faux tenons. And a couple of sliding bins create additional storage.

CASE DETAILS. The skirt is an easy addition. It's cut to fit between the case sides. Detail 'b' above shows where to attach the pair of glue blocks to create a 5/16" setback from the front of the case. Then you can glue the skirt in place.

TOP. Gluing up a wide panel to form the top comes next. Take some extra time to look for a good grain and color match between the boards.

After cutting the top to size, there's a little routing to be done. That starts with four mortises for the plugs that hide the screws used to attach the top. Detail 'a' and the left drawing below shows where to locate them. Finally, rout a

How-To: CUT TOP MORTISES & PREPARE SHELVES

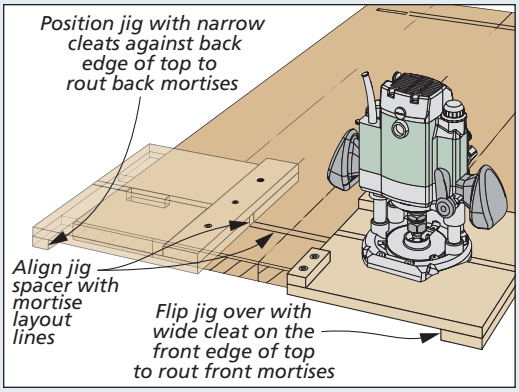

Mortises in the Top. Using the same jig as before, rout the mortises in the top, flipping it to rout the two on the opposite edge.

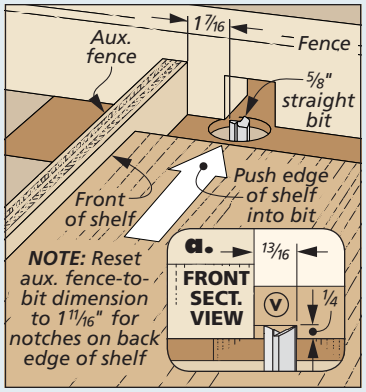

Notches. Set up a fence on each side of the bit to locate the slot and guide the workpiece.

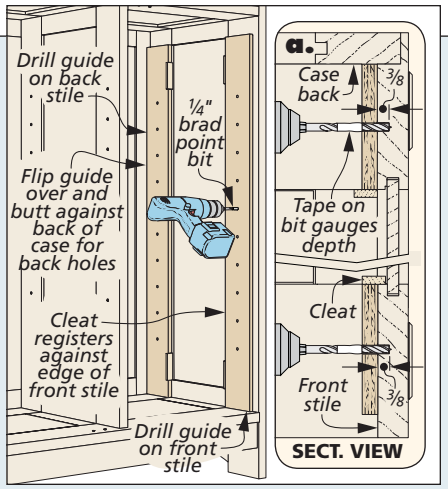

Shelf Pin Holes. Using the jig shown on the upper left as a template, drill holes in the sides and divider.

small chamfer on all four top edges. Then chamfer the front and end edges on the bottom face before attaching the top.

MORTISE PLUGS. The last details to add to the outside of the case are the mortise plugs. For these, plane some stock to thickness to fit the width of the mortises. Turn to Shop Notes on page 66 to find out how I shaped and cut the twelve plugs (plus a few extra). When it comes time to glue them in place, the only trick is to very lightly tap them into the mortise while keeping the top of the plug parallel with the surface. Once the plugs are in the mortises, you won't be able to remove them to make adjustments.

ADJUSTABLE SHELVES. Turning to the inside of the cabinet, the six shelves are all glued up from 1"-thick stock. After cutting them to size, rout notches on the bottom to engage the shelf supports (middle drawing, bottom of opposite page). This secures the shelves and completely hides the supports from view.

SHELF SUPPORTS. You'll also need to drill holes for the shelf supports. I used the simple drilling guide and techniques shown in the margin and lower right drawings on the opposite page.

REMOVABLE BINS. There are two bins that sit on any of the adjustable shelves (drawings at right). The bins themselves are made with ½"-thick stock and joined with half-blind dovetails. Have extra stock on hand to set up your dovetail jig.

The sides of the bins are shaped into a pleasing S-curve, and there's a curved hand hold in the front. I waited to do all of this shaping after completing the dovetail joinery. Figures 1 through 3 at right show how and where to make the cuts, as well as the groove for the bottom.

GUIDES. After assembling the bins, you can work on the parts that help the bins slide smoothly and sit centered on the shelves. A pair of narrow runners are glued to the bottom of each bin. The drawings at the upper right show how they fit tight against the sides of the bins.

Details 'c' and 'd' and Figure 4 in the How-To box at right show the L-shaped guides that keep the bin centered on the shelf. These guides slip into the space between the edge of the shelf and the panel in the case side or divider. The great thing is, you can move the guides to any of the adjustable shelves depending on your storage needs.

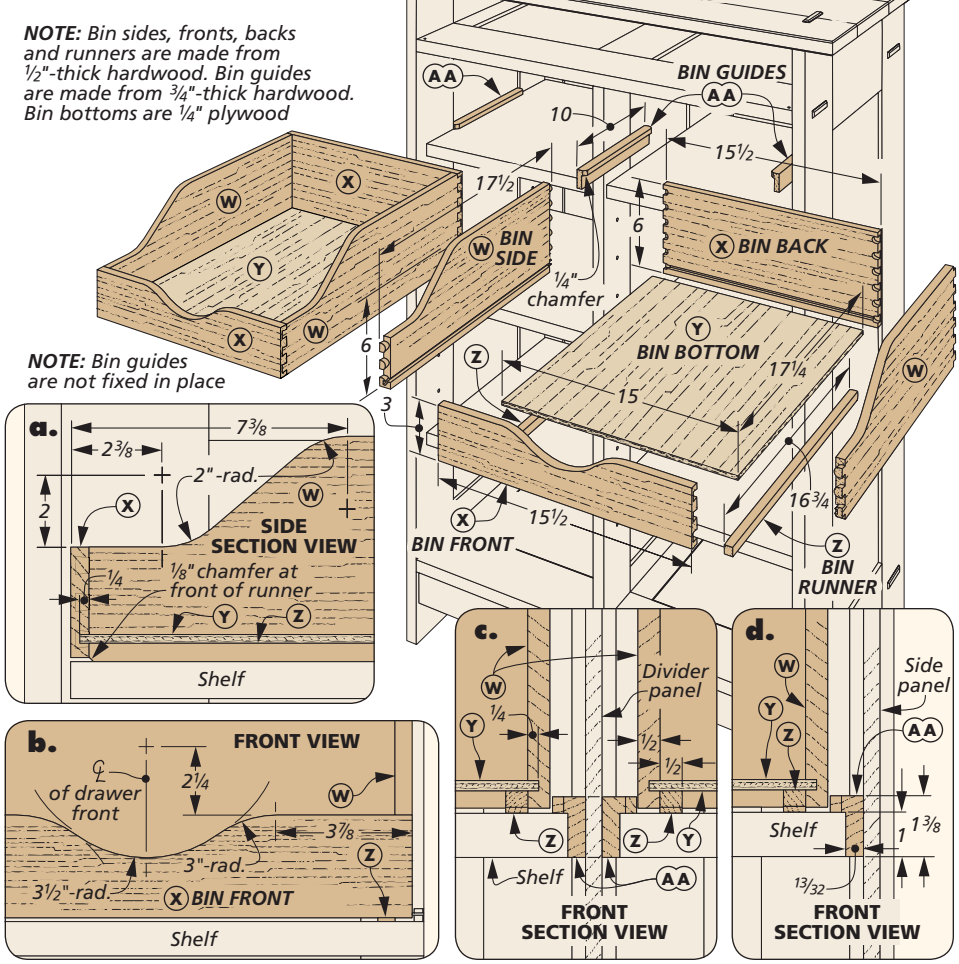

How-To: CUT DOVETAILS & GUIDES

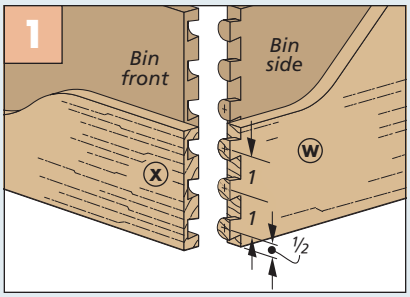

Dovetail Details. After using a dovetail jig to cut the half-blind dovetails, lay out the curves.

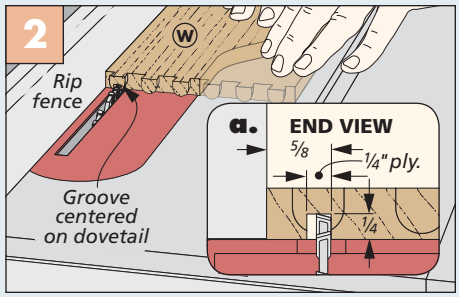

Cutting the Grooves. Make a couple of passes with a standard blade to sneak up on a snug fit with the plywood bottom.

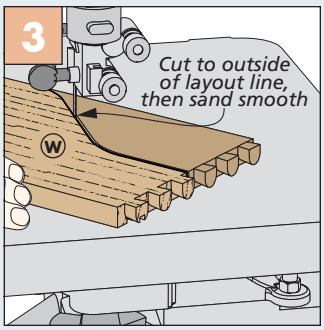

Shape Bin Sides & Front. The band saw makes quick work of cutting the curves.

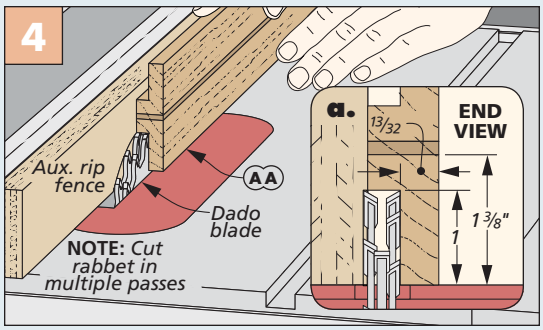

Bin Guides. To make the bin guides, first form a rabbet along each edge of a ¾"-thick blank. Then rip the blank in two to form each of the guides.

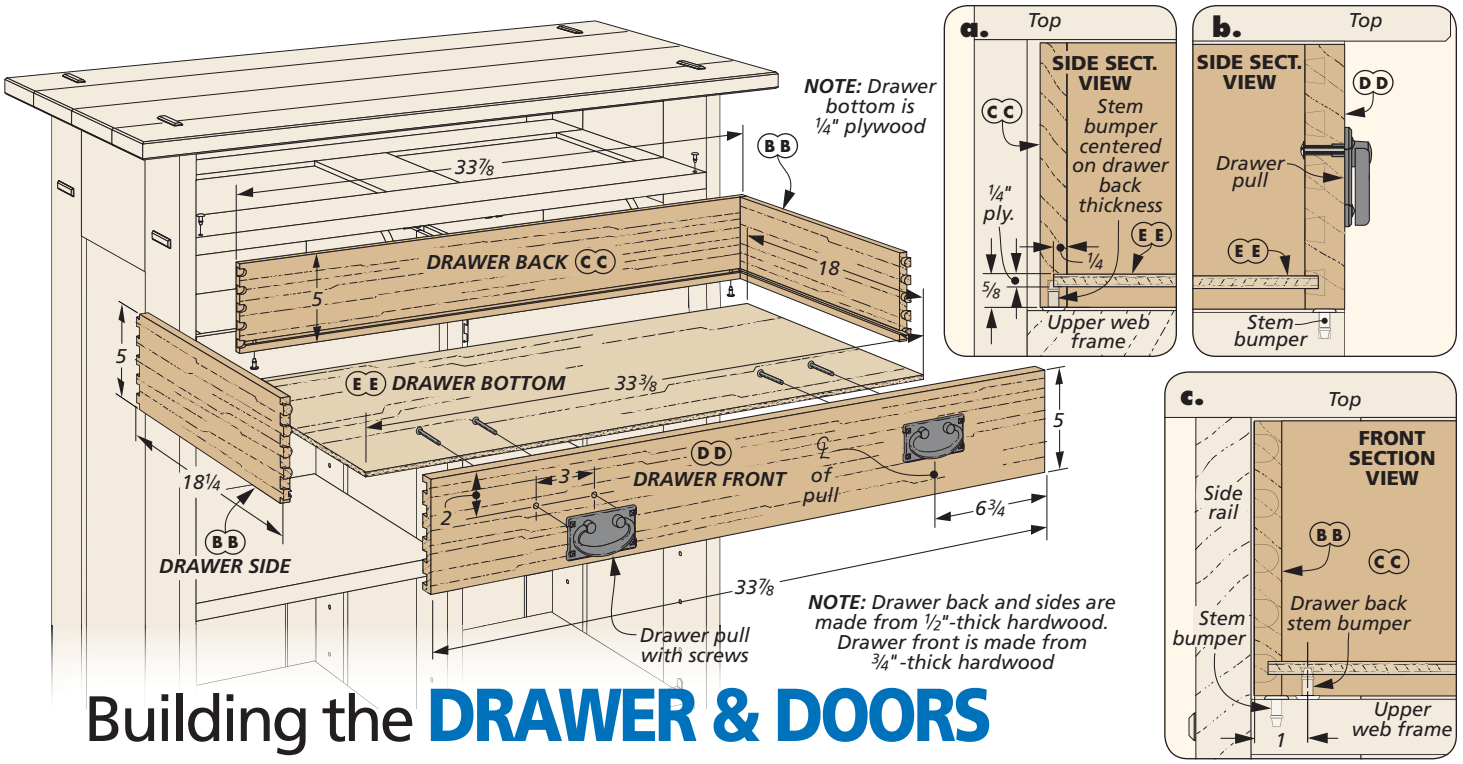

Building the DRAWER & DOORS

The dresser is really taking shape now. The last things to build are the large drawer and the pair of doors.

DRAWER. The drawer construction follows a path similar to the bins. The front and back are joined to the sides with half-blind dovetails. The box below shows the typical dovetail spacing using a *Porter-Cable* dovetail jig.

Unlike the bins where the sides, front, and back were ½" thick, the drawer front is ¾" thick. Other than that, the construction is the same as the bins.

The bottom edge of the drawer back has a pair of stem bumpers to help the drawer slide smoothly. It's easier to drill the holes for the bumpers before you assemble the drawer. I also like to lay out and drill the holes for the drawer pulls before assembly. The drawings above show the details for locating these holes.

It's easier to apply a stain to the drawer front before assembly. Just be sure to keep the finish away from the dovetails and pins so the glue will stick.

A PAIR OF DOORS. To complete the dresser and make it stand out in any room, you'll work on the doors next. On the opposite page, you can get an idea of how they go together.

Don't be overwhelmed by the number of parts, especially in the grid openings. Building the doors isn't really difficult. I'll step you through the process.

FRAME & PANEL ASSEMBLIES. As with the previous assemblies, building the doors should be familiar territory. It starts with two wide stiles. Connecting the stiles are three rails. The bottom of the door features a hardwood panel. The upper two rails frame a grid to form four openings that are filled in with stained glass. The small pieces of the grid create attractive shadow lines that really add some detail and draw attention to the dresser.

STOCK PREP. There's nothing more frustrating than building a door and finding out it's warped or twisted slightly when you install it. That's especially a problem on large doors, like the ones shown here. You can help eliminate this problem with some careful stock prep.

First, make sure each of the parts is straight with no twist, cup, or bow. And when cutting the joinery, take care to make sure the cuts are square. Now you're ready to start making the doors.

DOOR STILES. You need to cut a centered groove on the inside edges of the stiles, just like before. The doors also feature a chamfer on the inside face, along the hinge edge. This is to provide clearance for the bins when pulling them out. Detail 'b' on the opposite page shows where it's located.

How-To: MAKE DOVETAILS & CUT GROOVE

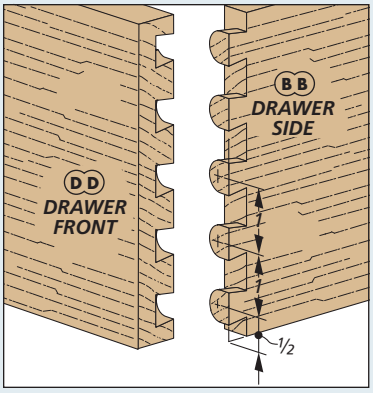

Dovetail Spacing. Your dovetail jig will dictate the spacing of the pins and tails on the drawer parts.

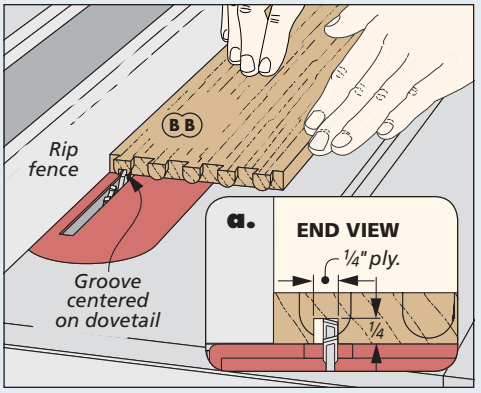

Groove for Bottom. Cut the groove for the plywood drawer bottom by making a couple of passes with a standard blade.

DOOR RAILS. The three short rails complete the frame of the door. The only thing to note here is that the middle rail has a groove along each edge.

DOOR GRID. As you can see at right, there are a lot of pieces that fill in the upper opening in the door. To make things simple, start in the middle and work your way out. I started with the vertical grid stile and two grid rails. You'll make and install the small filler pieces after the door is assembled.

The fillers fit into grooves in the grid rails and stile. So to make the rails and stiles, I started with an extra-long blank, 1½" wide. This way, you can cut grooves along each edge before cutting the parts to their final length. All that's left to do on these parts is to cut stub tenons on the ends to fit into the door rails and stiles.

DOOR ASSEMBLY. The box below walks you through the process of assembling each door. (Remember to stain the panels first.) To make sure the grid components are centered, it's a good idea to mark centerlines on the parts. The first parts you'll glue together are the upper and mid door rails and the grid stile.

Once the glue dries on this subassembly, glue up the door starting with one door stile and bringing in the lower rail, door panel, and the upper subassembly. This is when you'll add the two grid rails, centering them vertically on the grid stile. Then glue and clamp the opposite stile.

GRID FILLERS. The fillers for the grid create a rabbeted recess in each opening. You'll install small squares of stained glass on the back side of the openings later.

The filler strips start out as a long blank. Installing the vertical fillers is the next order of business. Cut them just short enough that you can angle them into position then roughly center them in the groove (right drawing below). Don't worry about any gaps — they'll get covered up with the short, horizontal fillers.

For the horizontal fillers, simply cut them to length for a tight fit between the vertical fillers. It just takes a couple drops of glue to hold each filler in place. A little patience pays off in the end with a pair of great-looking doors.

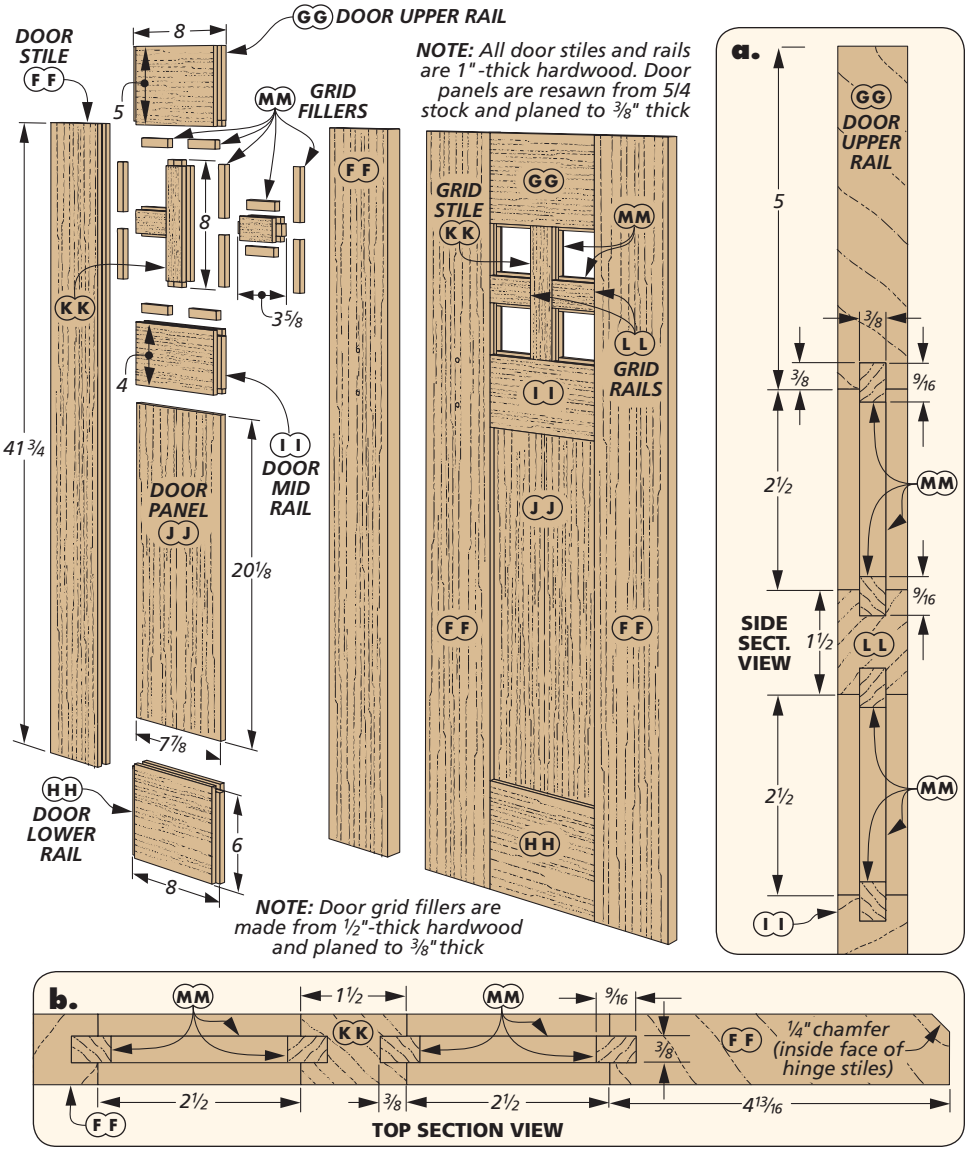

How-To: ASSEMBLE THE DOOR GRIDS

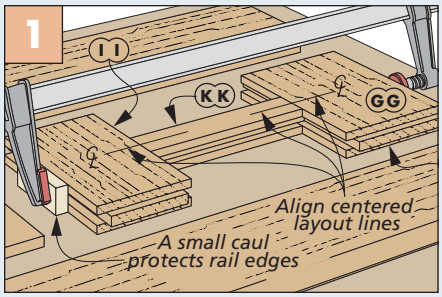

Door Subassembly. Gluing the grid stile to the upper and mid door rails makes assembling the door a smooth operation.

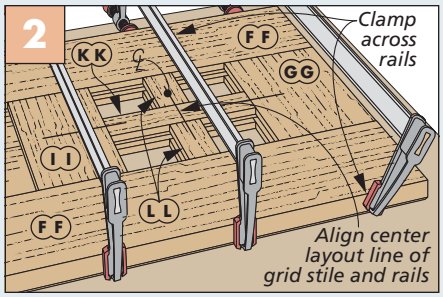

Final Door Assembly. The only trick to gluing up the door is to make sure the two grid rails are centered in the opening.

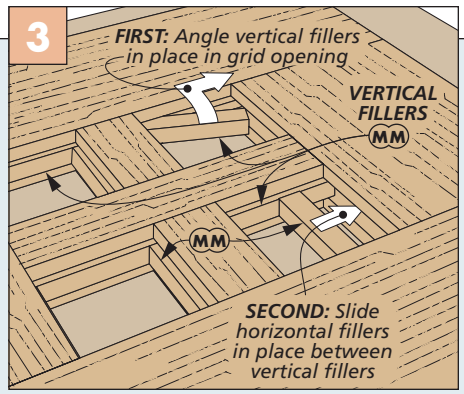

Two-Step Filler Glueup. Install the vertical fillers by angling them into place. Cut the horizontal fillers to fit.

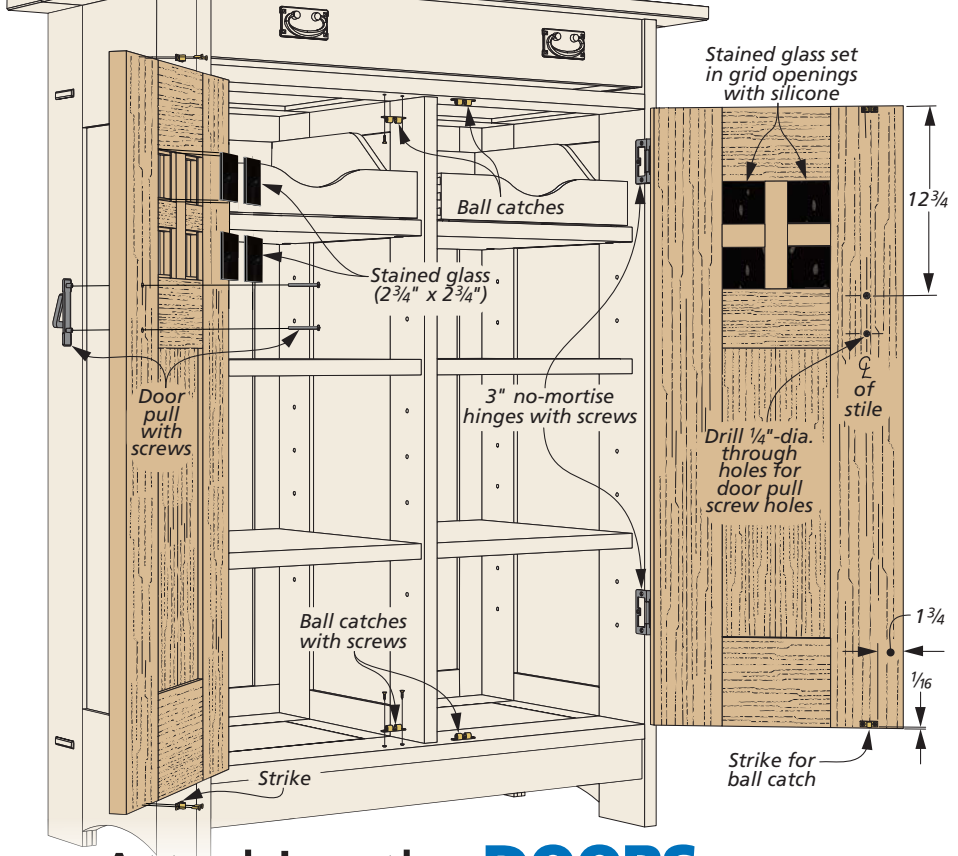

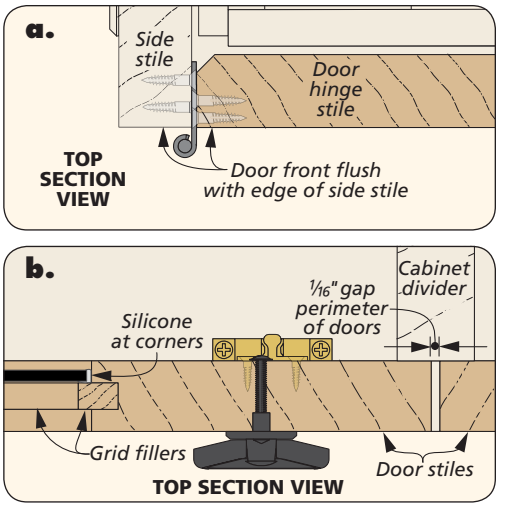

Attaching the **DOORS**

All of the hard work is done, and you're almost ready to attach the doors. You may want to enlist some help when installing the hinges. The doors can be a little heavy to work with by yourself.

STAINED GLASS. Before hanging the doors, I installed opaque stained glass squares in the door grid. Turn to page 67 to find out where I purchased the glass.

Whether you have the glass cut or you cut it, measure the opening and then subtract 1/8". This makes it easier to install.

Securing the glass couldn't be easier. All I did was place a small dab of silicone adhesive in each corner of the openings (detail 'a', right drawing at the bottom of opposite page). You don't want to go overboard with the silicone. It spreads easily and is surprisingly strong. It will hold the glass in place for years to come.

INSTALLING THE HINGES. The next order of business is attaching hinges. No-mortise hinges save a lot of time. There's no need to cut mortises in the doors or cabinet. Plus they naturally create a consistent gap between the door and cabinet.

The middle drawings below show where to mount the hinges on the door. I find that it's easier to attach the hinges on the door and set the door in place. I like to rest the door on shims to create a 1/16" gap at the top and bottom of the door. This is your opportunity to fine-tune the fit of each of the doors in their openings. Mark the hinge screw locations on the cabinet to serve as a guide when installing them.

DOOR PULLS. Before installing the catches, it's a good idea to install the door pulls. This makes it easier to open and close the doors when fitting the catches.

BALL CATCHES. Once the doors are in place, it's an easy task to install a ball catch at the top and bottom of each door. The right drawing below shows the offset dimension of the ball catch from the edge of the cabinet and distance from the divider. It's fastened with a pair of

How-To: INSTALL HARDWARE & GLASS PANELS

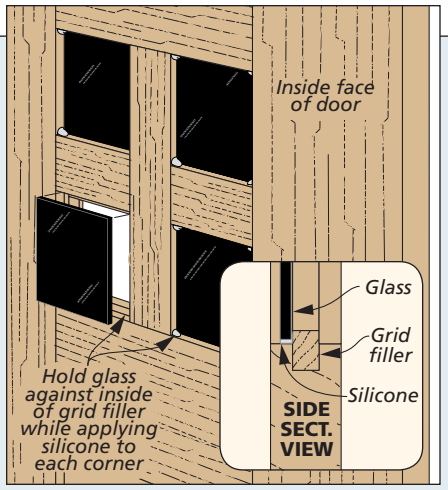

Installing Glass. Make sure the glass fits into the opening before applying a dab of silicone at each corner.

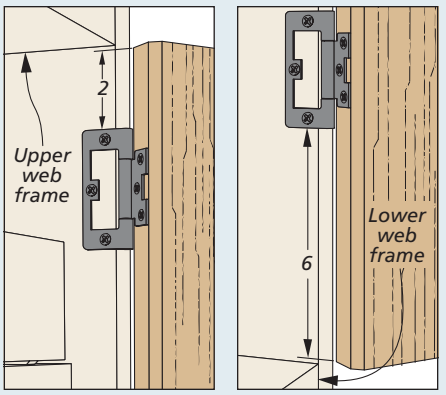

Hinges. Mount the hinges on the door and then shim the door to create a 1/16" gap to locate the hinge on the case.

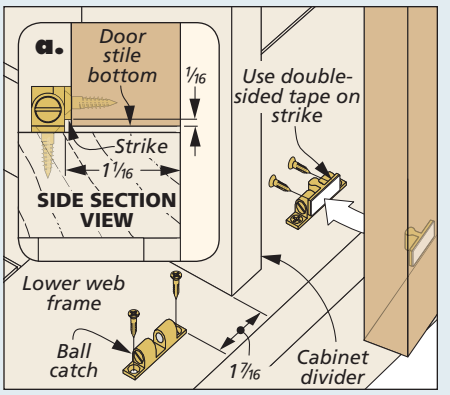

Ball Catches. Once the catch is attached to the web frame, use tape to locate the strike on the door.

screws in the web frame. To mark the location of the strike on the door, you can use double-sided tape on the back of the strike. Insert the strike into the catch and press the door closed. You should be able to open the door with the strike attached. If the strike remains in the catch, you may have to back off the screws in the catch to loosen the tension on the strike and try again.

FINISH. The stain I used was *Varathane* brand in their *Gunstock* color. It's an oil-based stain made by *Rust-Oleum*. Simply wipe it on, let it sit for a few minutes, and then wipe off the excess. I sprayed the dresser with two coats of lacquer. If you don't have spray equipment, a few coats of a water-based polyurethane finish will give it a nice finish.

Once the finish dries, you're left with the task of moving the dresser into your home and filling it up. The additional storage space it provides makes it a welcome addition to any room. W

Materials, Supplies & Cutting Diagram

A	Side Stiles (4)	1 x 5 - 55
B	Side Rails (4)	1 x 8 - 10¾
C	Side Panels (2)	⅜ x 10⅝ - 38⅝
D	Web Frame Fronts (2)	1 x 5 - 34⅝
E	Web Frame Backs (2)	1 x 4 - 34⅝
F	Web Frame Ends (4)	1 x 2 5/16 - 10¾
G	Web Frame Rails (2)	1 x 5 - 10¾
H	Lower Panels (2)	11/16 x 10⅝ - 13⅛
I	Upper Panels (2)	⅜ x 10⅝ - 13⅛
J	Divider Stiles (2)	1 x 4 - 42½
K	Divider Rails (2)	1 x 2 5/16 - 10¾
L	Divider Panel (1)	⅜ x 10⅝ - 38½
M	Back Stiles (2)	1 x 2¾ - 55
N	Back Center Stile (1)	1 x 5 - 38⅝
O	Back Upper Rail (1)	1 x 8 - 30¾
P	Back Lower Rail (1)	1 x 4 - 30¾
Q	Back Panels (2)	⅜ x 13⅛ - 38⅝
R	Glue Blocks (2)	¾ x ¾ - 2½
S	Skirt (1)	1 x 2¾ - 34
T	Top (1)	1 x 22 - 42
U	Mortise Plugs (12)	½ x 2½ - ½
V	Shelves (6)	1 x 17¾ - 16 5/16
W	Bin Sides (4)	½ x 6 - 17½
X	Bin Fronts/Backs (4)	½ x 6 - 15½
Y	Bin Bottoms (2)	¼ ply. - 15 x 17¼
Z	Bin Runners (4)	½ x ½ - 16¾
AA	Bin Guides (4)	¾ x 1⅜ - 10
BB	Drawer Sides (2)	½ x 5 - 18¼
CC	Drawer Back (1)	½ x 5 - 33⅞
DD	Drawer Front (1)	¾ x 5 - 33⅞
EE	Drawer Bottom (1)	¼ ply. - 18 x 33⅜
FF	Door Stiles (4)	1 x 4 13/16 - 41¾
GG	Door Upper Rails (2)	1 x 5 - 8
HH	Door Lower Rails (2)	1 x 6 - 8
II	Door Mid Rails (2)	1 x 4 - 8
JJ	Door Panels (2)	⅜ x 7⅞ - 20⅛
KK	Grid Stiles (2)	1 x 1½ - 8
LL	Grid Rails (4)	1 x 1½ - 3⅝
MM	Grid Filler (1)	⅜ x 9/16 - 112 rgh.

- (24) #8 x 1½" Fh Woodscrews
- (4) Stem Bumpers
- (2 pr.) 3" No-Mortise Hinges w/Screws
- (2) Drawer Pulls w/Screws
- (2) Door Pulls w/Screws
- (24) ¼"-dia. Shelf Supports
- (4) Ball Catches
- (8 pcs.) 2¾" x 2¾" Stained Glass

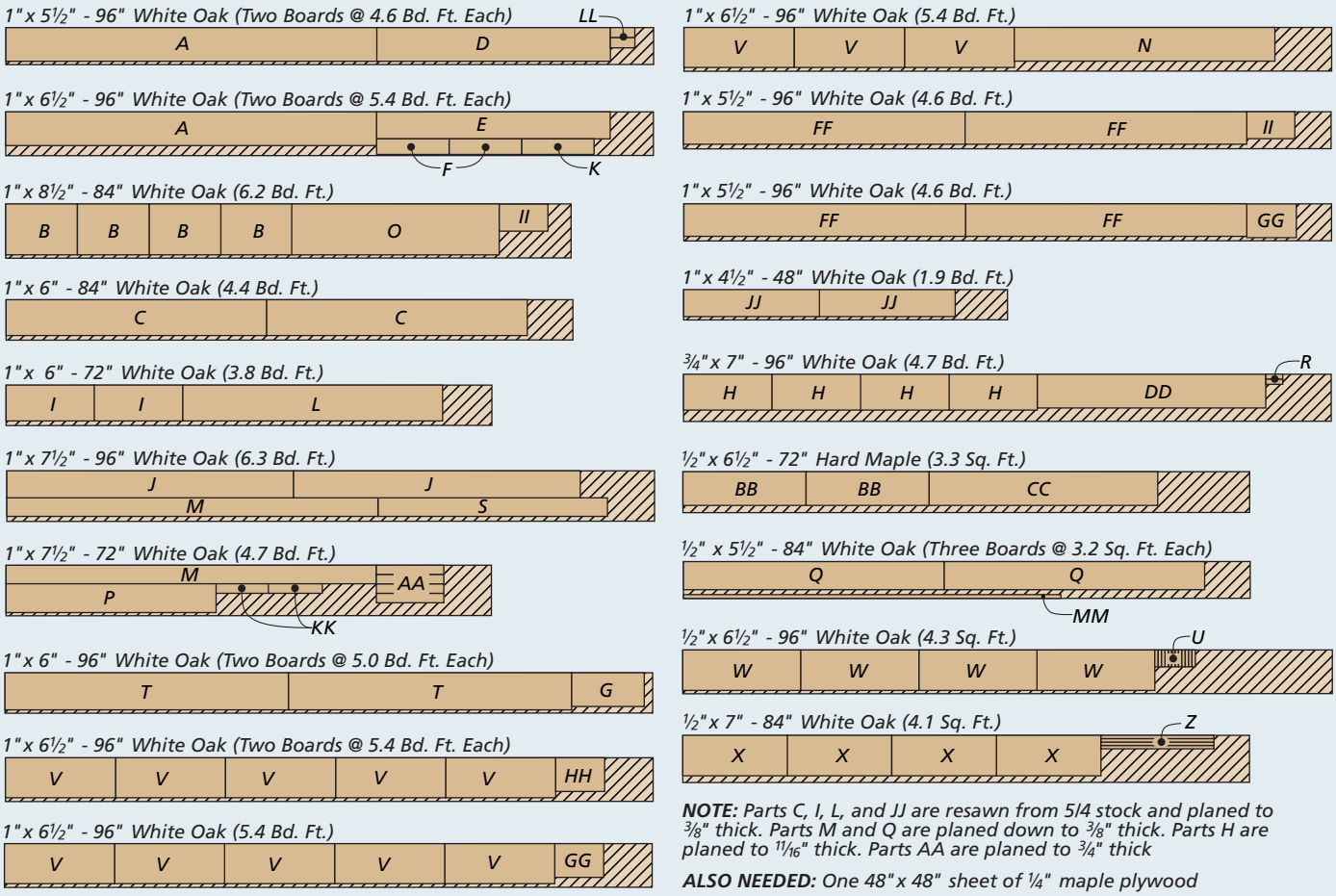

NOTE: *Parts C, I, L, and JJ are resawn from 5/4 stock and planed to ⅜" thick. Parts M and Q are planed down to ⅜" thick. Parts H are planed to 11/16" thick. Parts AA are planed to ¾" thick*

ALSO NEEDED: *One 48"x 48" sheet of ¼" maple plywood*

12 Box Joint Quick Tips

Box joints combine eye-catching looks with extra glue surface. Cutting the joinery is straightforward enough — after all, it's just a matter of creating a series of evenly spaced slots.

Beneath the surface, you'll find that getting good results involves paying attention to some important details. The tips you see here aren't groundbreaking. But taken together, they'll help you get snug-fitting joints time after time.

While cutting box joints, firm downward hand pressure ensures that slots are cut consistently on all the parts.

[1] Start Wide

Accurately preparing parts is fundamental to well-fit joints. This involves cutting parts to consistent lengths and thicknesses. However, I like to cut project parts extra wide to start with. Between setting up the dado blade, the jig, and actually making the cuts, variations can creep in that lead to a joint that doesn't end with a full pin or slot. By using wide parts, you can trim them to final width once the joinery is cut.

[2] Make Your Mark

When you use extra-wide blanks, it's important to orient each part on the jig the same way. Then when you assemble the joints, you're sure to have one side of the assembly flush.

For example, I like to cut the parts starting from the bottom edge. In order to use the same edge, you need to know what edge that is. So I also label the bottom edge and mating corners so that I cut the same arrangement of pins and slots on each end of the parts (main photo and photo at left). This keeps the whole assembly looking more consistent.

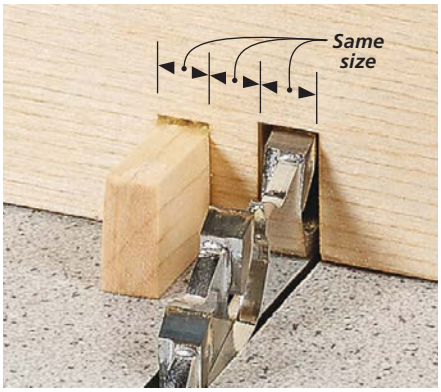

The width of the key, the blade, and the space between them should be the same for the jig to cut tight-fitting box joints.

[3] Dial In Accuracy

If you aren't familiar with box joints, setup can seem intimidating. Three dimensions are key: the width of the blade and key, plus the gap between these two. Ideally, these should be equal (photo above). From there, you can use test cuts to fine-tune the size of the gap for a good fit.

[4] Blade Height

The final piece of the setup puzzle is the height of the saw blade. Rather than try

to nail a flush-fitting joint right off the bat, I aim for the pins to be slightly proud of the mating surface (no more than 1/32"), as shown in the near right photo. After assembly, all it takes is a little sanding to make the joints perfectly flush.

[5] Back It Up

Cutting box joints is a rip cut, so tearout on the sides of each slot isn't likely. But the ends (bottoms) of the slots can chip out without some backup. Once you get your jig dialed in, slip a piece of hardboard behind your workpiece (lower left, opposite page). This supports the workpiece to minimize chipout.

[6] Constant Pressure

Consistency is the name of the game, but if you have a lot of box joints to make, the process can get monotonous. As you work, be mindful of how you're applying pressure to the workpiece. I like to concentrate on holding the parts down (and not so much to either side), as in the lower left photo on the facing page. Inconsistent pressure can lead to pins that vary slightly and prevent a joint from closing.

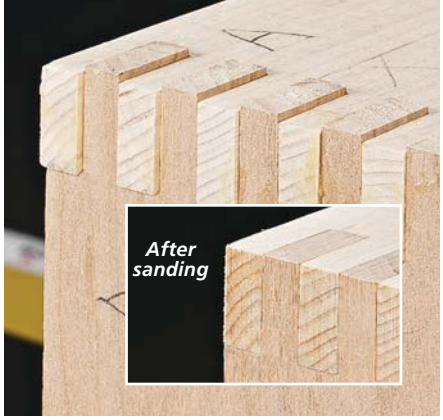

▲ When setting up the jig, aim for pins that are slightly proud of the surface. Light sanding brings them flush in a short time.

▲ Hardwood cauls placed just behind the joints direct clamping pressure to close up the box joints without getting in the way.

[7] Keep It Clean

Tight-fitting joints depend on close tolerances during the cutting process. Even something as minor as a little sawdust buildup can throw off a good fit. I make it a practice to regularly clear away dust and debris from the jig and saw to keep it from spoiling the alignment of a workpiece.

[8] Mess-Free Glueup

The combined surface area of all the pins and slots is what gives a box joint assembly its strength. But this can make applying the glue a nightmare.

First, I like to use slow-setting glue. It has a longer open time perfect for applying glue to a lot of pins, as shown in the far left photo.

Cleaning glue squeezeout from an inside corner isn't how I want to spend my shop time. The solution is to apply tape right along the baseline of the slots. When the glue has set up, you can peel the tape away and leave a clean inner surface (near left photo).

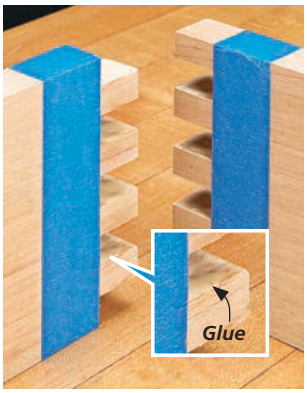

▲ For a clean inside corner, apply a strip of tape along the baseline of the box joints. Removing squeezeout is just a matter of peeling off the tape once the glue sets up.

▲ After assembly, fill the gap created by the groove for a drawer bottom with a matching tapered plug. When the glue dries, use a chisel to trim away the excess.

▲ A putty knife forces filler into small gaps in box joints to create a seamless look.

[9] Clamp It Right

Creating a joint where the pins protrude slightly makes getting a flush joint practically foolproof. But it also makes it difficult to apply clamping pressure across the joint. Instead, I use cauls, as you can see in the upper right photo. These strips of wood are set just in from the joints so that clamping pressure ensures the joints will seat completely.

[10] Sanding The Joints Flush

Once the clamps come off, you can sand or plane the joints flush. The trick here is keeping all the surfaces flat and square. The main photo on the opposite page shows the method I like best. Apply adhesive-backed sandpaper to your table saw. The rip fence helps keep the project square. Light back and forth strokes with 120-grit paper quickly level the surfaces and shows off the results of your hard work.

[11] Bottoms & Backs

In order to accommodate a drawer bottom or case back, you need to cut a groove in all the parts. This groove should align with a full pin or slot. At assembly time, you'll notice that the groove creates a noticeable hole on the ends of one set of pins.

Plug it by taking one of your test pieces and ripping off plug blanks. Slightly taper the end and glue it in place (lower left photos). Remove most of the excess plug with a chisel. Then a few swipes with some sandpaper bring everything flush.

[12] Eliminate Gaps

After glueup, you may notice small gaps left by the angled tips of the dado blade. I like to apply wood filler along the joints. After sanding the dried filler smooth, it blends in with the alternating grain pattern of the box joints. W

super-smooth surfaces with Random Orbit Sanders

When it comes to sanding, efficiency is the name of the game in my book. Whatever steps I can take to get things done quicker, I'll take. Many of us will reach for a powered sander, often times a random orbit sander, to make life easier. And while one of these sanders will shorten the amount of time you spend perfecting your projects, it's important to develop good sanding habits along the way. Here, I'll take a look at some of the best practices for getting the most from your random orbit sander.

▼ Skipping every other grit of sandpaper can be an efficient alternative. Try a sequence like the one shown here.

USE DUST COLLECTION. Perhaps the most logical first step is utilizing dust collection. Most random orbit sanders come with a dust collection canister or bag. But hooking up your sander to a shop vacuum or dust collection system (photo above) is a superior alternative in many ways.

The suction power of a dust collection system will keep the sanding disc from loading up with sanding dust and wearing out prematurely. It also helps to keep the sandpaper in constant contact with the sanding surface. And the more the sandpaper stays in contact with the surface, the quicker you get done.

Another bonus of using dust collection is the health benefit. Keeping the fine dust particles out of the air in the first place will ensure they stay out of your lungs, as well.

SKIP GRITS. One of my favorite sanding time-savers is skipping discs. Instead of working through every grit — 80, 100, 120, 150, 180, 220 — skipping every other grit (photo, at left) will save you time in the long run. Try progressing through just a few grits next time — 80, 120, and 180 — or 100, 150, and 220. As long as the sanding marks from the previous grit are removed, it's safe to move on to the next disc.

STEER CLEAR OF EDGES. Be sure to sand extra carefully near edges to avoid rounding them over. Only allowing the edge of the sander's pad to extend past the

edge of the workpiece is the best strategy. This will help to avoid the tendency for the sander to tip and round over the edges. In some situations (particularly when sanding softwoods) it may make sense to switch to a hand sanding block.

AVOID MARKS. By design, a random orbit sander will leave very light swirl marks on the work surface. To avoid making these marks more pronounced, you need to use the proper techniques when sanding. And the best words of advice here is to slow down and apply light pressure.

Be sure to let the random orbit action of the sander do its job. This is accomplished by using light downward pressure. No more than the weight of your arm and hand should be on the sander (photo below). And move the sander very slowly. About 1" per second is a good rule of thumb, which leads to the next important point.

▲ For best results, apply only light downward pressure and maintain a forward speed of about one inch per second.

KEEP IN LINE. Be sure to follow a set pattern for proper overlap, especially when sanding a large surface (illustration, below right). Establishing an east-west, north-south pattern on the workpiece and overlapping each pass by ⅓ of the sanding disc ensures that you'll have proper coverage of the entire surface.

MARK IT UP. Since a random orbit sander has a somewhat agressive nature, it can be easy to sand through the thin veneer layer of some plywoods, leaving behind a nasty scar on the surface. To avoid this problem, mark a few light pencil lines on the plywood surface before you start sanding, as shown in the photo at right. When the pencil lines are gone, you're done sanding.

MATCH THE SANDER TO THE JOB. For large surfaces, a large sander really is better. It may not seem like it, but switching from a 5" sander to a 6" sander means almost 44% more sandpaper surface will be in contact with the worksurface (photo, below left). This saves valuable time that's best spent on other tasks.

GANG SAND EDGES. Another time-saving trick is to gang sand the edges of boards that are all the same width, as shown in the main photo on the opposite page. Clamping pieces together and gang sanding accomplishes two goals at once. First, you'll avoid sanding one workpiece more than another. And second, the wider surface created by clamping multiple pieces together also helps to avoid rounding over edges.

▲ When sanding veneer plywood, make a few light pencil lines on the surface to know when to stop sanding.

BUY PREMIUM SANDPAPER. And finally, it may be tempting to buy loads of bargain-priced sanding discs — but beware. This lower-priced sandpaper may also be lower grade, as well. Premium grades of sandpaper have higher-quality abrasives. This grit removes wood much faster than standard (cheaper) sandpaper and the abrasive particles stay sharper longer. So in the long run, it makes sense to get the best sandpaper you can afford.

A random orbit sander will certainly help you get through your sanding tasks in short order. By using these tips you'll save time, get better results, and this once messy and monotonous task won't feel like such a burden anymore. W

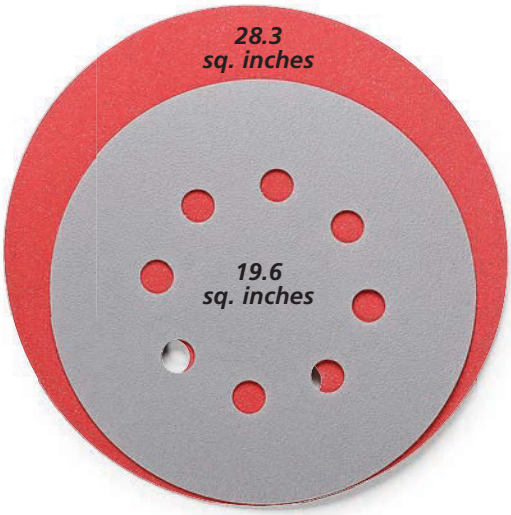

▲ Switching from a 5" orbital sander to a 6" orbital sander results in an almost 44% increase in the amount of surface area the disc can cover.

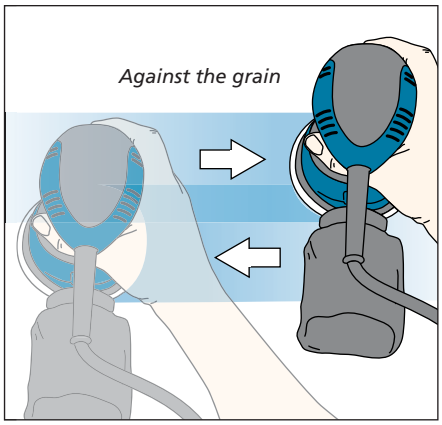

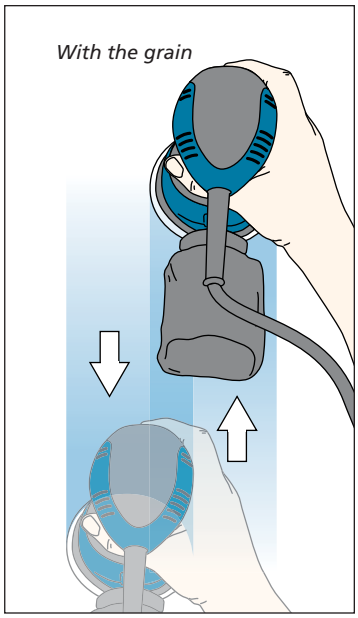

Sanding Technique. When sanding a large surface area, start by moving the sander in an east-west pattern (above), overlapping by ⅓ of the disc. Then switch to a north-south pattern (at right) to ensure complete coverage.

getting the most from a materials list & Cutting Diagram

The first step in building any project is acquiring all of the lumber and other supplies. In *Woodsmith* magazine, we help you with this by providing a cutting diagram and materials list with every project. You can see a sample of this at the top of the opposite page.

From time to time, we get questions on how to use the cutting diagram. In short, it serves as a guide for purchasing the lumber. The supplies list shows the fasteners, drawer pulls, hinges, or other items needed to complete the project. The materials list breaks down the project into its parts. The key to success on your project lies in understanding what these can offer before you turn on the saw.

A LIST OF PARTS. Let's start with the materials list. Every part in the project is assigned a letter and part name. This helps you identify each part in the artwork for the project. The quantity of each part is listed after the part name.

The overall dimensions come next. And this is where I want to explain what each of the numbers mean. The dimensions shown are listed in order: thickness, width, and then length. You can see how these relate to a project workpiece in the drawing below.

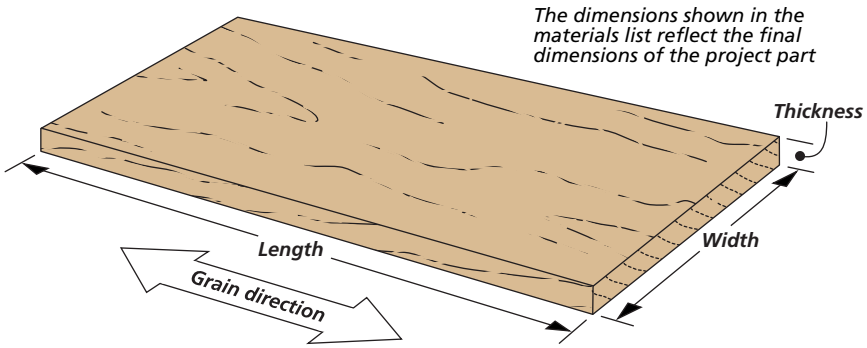

THICKNESS. Starting with the thickness, this dimension usually indicates the *final*, or finished, thickness of the workpiece, not the rough (nominal) thickness of the lumber. For example, a part listed with a 1" thickness will have been planed from 5/4 stock. For sheet goods, the thickness is followed by an abbreviation such as "ply." (plywood), "hdbd." (hardboard), or "MDF" (medium-density fiberboard).

WIDTH & LENGTH. The final width of the part is the second dimension shown. For solid-wood parts, this dimension is measured across the grain. In other words, this is the dimension you'll use to rip the workpiece to width.

As you might guess, the last dimension shown in the list is the overall length of the part. This includes any joinery, like tenons, that needs to be cut on the ends of the workpiece before assembly.

For sheet goods without a definite "grain," like MDF or hardboard, the length and width dimensions can be cut in any direction. But for cabinet-grade plywood where appearance is a concern, I treat the grain direction the same

Materials, Supplies & Cutting Diagram

Part letter	Part name	Quantity	Thickness	Width	Length
A	Leg Blanks	(4)	3	3	29¼
B	Upper Rail	(1)	1	1⅝	33¼
C	Middle Rail	(1)	1	2¾	33¼
D	Lower Rail	(1)	1¾	3½	33¼
E	Back	(1)	⅜ ply.	18	32¾
F	Side Panels	(2)	⅜ ply.	18⅝	18¾
G	Side Braces	(2)	2	3	18
H	Upper/Lower Stretchers	(2)	¾	3	32½
I	Drawer Guides	(4)	⅝	2	20
J	Drawer Sides	(4)	½	7⅜	18¾
K	Drawer Fronts/Backs	(4)	½	7⅜	31⅞
L	Drawer Bottoms	(2)	¼ ply.	18½	31⅜
M	False Fronts	(2)	1¾	7⅜	31⅞
N	Cleats	(2)	1	1½	33½
O	Top	(1)	¾	24	38

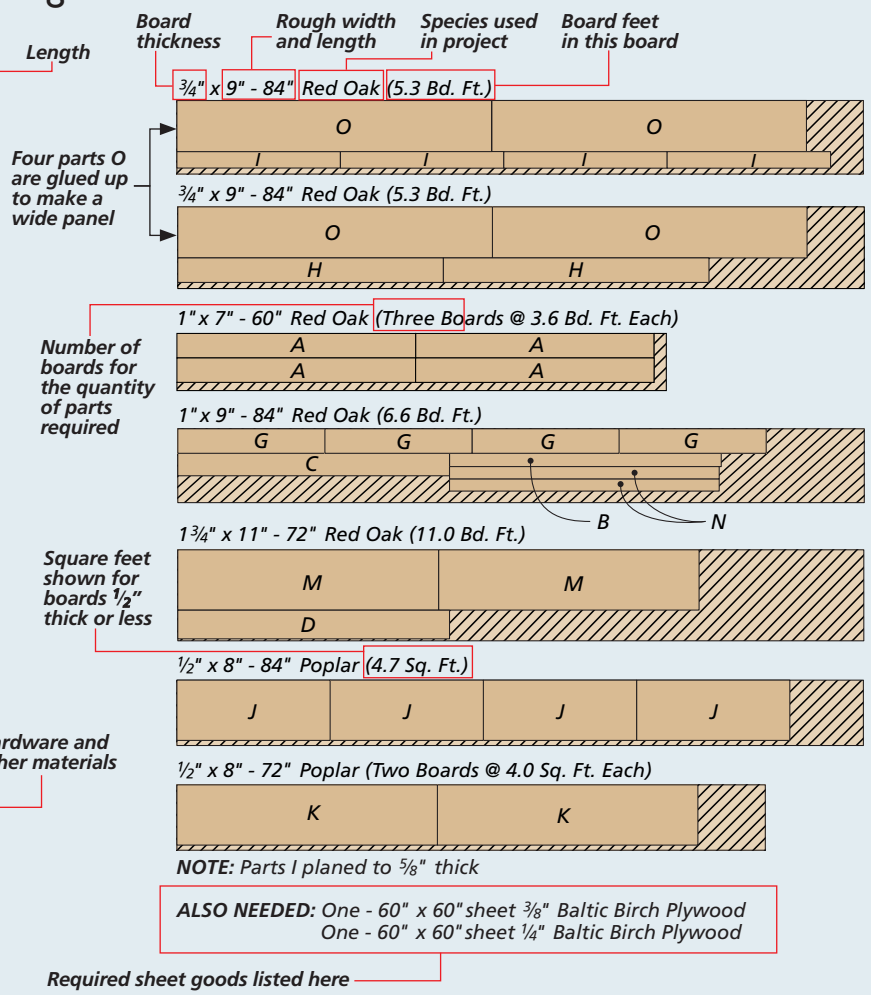

- (12) #8 x ¾" Fh Woodscrews
- (8) 1¼" Pocket Hole Screws
- (6) #8 x 1½" Ph Woodscrews w/ Washers
- (4) 1⅛" Drawer Pulls
- (1) 2' x 8' Sheet Lacewood Veneer

Hardware and other materials

as hardwood — the length dimension is always with the grain of the face veneer.

A LIST OF HARDWARE. Besides a list of the parts needed to assemble the project, there's a list of hardware and other materials required to complete your project. For instance, the fasteners you need are shown in the list of supplies. The type of screw is abbreviated: Fh (flathead), Rh (roundhead), and Ph (panhead). It's a good idea to keep a supply of #8 x 1¼" and #8 x 1½" flathead woodscrews on hand. These are common sizes you'll use on most projects.

For the other hardware like hinges and drawer slides, I like to purchase and have them available before starting, just to make sure everything will fit. Hardware sizes and hole locations can vary, so it helps to buy them beforehand.

CUTTING DIAGRAM. For a visual guide and rough idea of how much lumber you need, take a look at the cutting diagram. It shows each hardwood part on an imaginary board. (I'll talk more about how to use the cutting diagram later.) Like each part in the parts list, each board in the cutting diagram is labeled, as shown above. The first thing you'll notice are the thickness, width, and length dimensions of the board.

A key dimension is the thickness of the board. It details the surfaced thickness of the boards. It's not the nominal thickness you buy at a lumberyard. Some parts may still have to be resawn or further planed to the final thickness shown in the materials list before cutting the parts to width and length.

The width and length shown for each board on the cutting diagram need a little explanation. As I mentioned before, these boards are shown only as guidelines. You're not likely to find boards with these exact dimensions at your lumber supplier. The parts and boards are only shown to give you a rough idea of the minimum amount of lumber you'll need.

This is why the more important number to look at is the board feet. It's the minimum amount of rough lumber you'll need to build the project. For boards greater than ½" in thickness, the total number of board feet indicated should allow you to cut out all of the parts labeled on that board. Boards ½" thick or less are sold by the square foot. If multiple boards are required, the quantity of boards will also be shown.

Nestled between the board dimension and the overall board footage is the species of wood used in the project. Secondary woods like poplar or maple are often used for drawer sides and backs.

At the end of the cutting diagram, there's a list of other sheet goods or items you need. That's also where we list any exceptions for part thicknesses. For example, we show part 'I' on a ¾"-thick board. But the parts list shows it needs to be planed to a thickness of ⅝" before using it in the project.

selecting parts on the WORKBENCH

You've read through the project plans, have a good understanding of how the project goes together, and you've looked over the parts and materials list. Now you're ready to go buy the lumber, right? But before heading straight out to the lumberyard with your cutting diagram in hand, there are a few things to take into consideration.

NO PERFECT BOARD. The cutting diagram is a "perfect world" scenario. First, it assumes that the grain and color of every board shown is perfect and matches one another. That doesn't account for the individual character of the board like knots, checking, wandering grain, warpage, or other defects.

One other factor is that most lumberyards stock their hardwood in random widths and lengths. So the chances of finding a board the exact size listed on the cutting diagram are pretty slim. And most lumberyards aren't willing to let you cut the boards to the size specified before you walk out the door.

A VISUAL GUIDE. You may be thinking, why bother with cutting diagrams at all? Like I said, they're a guideline. You can take the cutting diagram with you when you pick out your lumber. The diagram shows the relative size of each part on a board. Plus, you should have an idea of where the parts will be located on the project, so you can pick out the boards for the best appearance of those parts.

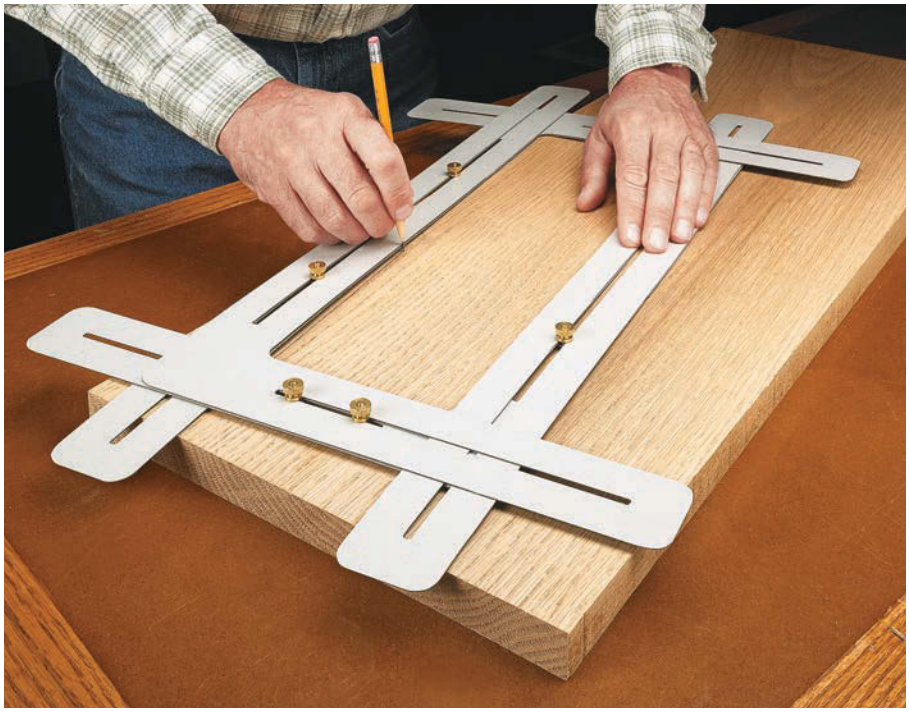

▲ A jig made from L-shaped pieces of plastic laminate can help you orient and arrange parts on a larger board. Adjust the strips to the rough size of the part and tighten the knobs. Place the jig on the board to "frame" the desired area for the part and outline it with a pencil.

If you need to glue up multiple boards for wide panels (left photo below), those boards should have matching grain and color. And even though parts like molding may be shown as thin strips in the cutting diagram, you'll want to leave room to safely rout their profile and then rip them from a wider blank, as shown in the lower right photo.

BUY EXTRA. Here's the bottom line — after sorting through the boards at the lumberyard, buy about 20% extra. There are benefits to having extra material on hand. It gives you more of an opportunity to find the best board for each part. The other advantage is that it gives you the opportunity to work around defects. You can see a trick I use in laying out parts in the photo above.

WATCH THE GRAIN. While you're laying out project parts, be conscious of the grain. For example, when there's a row of drawers in a project, I like to make sure the grain is continuous across them. To accomplish this, cut the drawer fronts sequentially from the same board, as

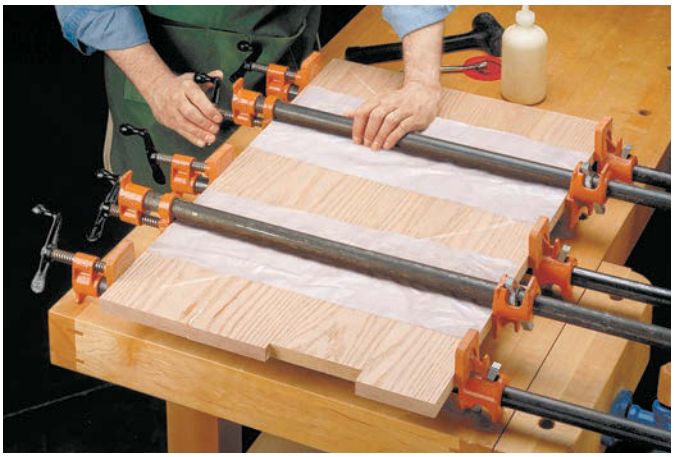

▲ When gluing up panels from multiple boards, it's important to take the time to find matching grain and color. The ultimate goal is to have the glue lines virtually disappear after the finish is applied.

▲ Even though thin parts like molding and glass stop may be shown stacked together on a cutting diagram, I like to cut them from a wider blank. Shape the edges before ripping the molding free.

you can see in the photo at right. For stacked drawers, find boards with similar grain pattern and color for a consistent, even look across the cabinet front.

When it comes to frames, the same idea works for parts like rails and stiles. I look for straight grain so the eye isn't distracted by wild grain that runs out the side on the finished piece.

SHEET GOODS. What I've talked about so far relates to getting the best-looking parts from hardwood. But the rules apply to visible parts cut from plywood, as well. Door panels and drawer fronts deserve the same attention to detail for making your project stand out. You can see in the photos below how just a little different placement of parts on a sheet of plywood can make a big difference in the overall look of the final part.

After the lumber is in your shop, start sorting it by color and grain. Use care in laying out the parts so that the grain is consistent and doesn't distract your eyes in the final project. For drawers, cut each one consecutively from the same board for continuous grain.

For sheet goods where appearance doesn't really come into play, I like to make a list of all of these parts that will be cut from the same material. Use graph paper to start roughing them out on a virtual sheet of material, as illustrated in the drawing below. A computer drawing program like *SketchUp* makes it easier to lay out and rearrange parts.

Laying out parts to get the most efficient use out of plywood may sacrifice the best overall look for your project.

For a better-looking project, use care in part layout to get parts that look good without worrying so much about waste.

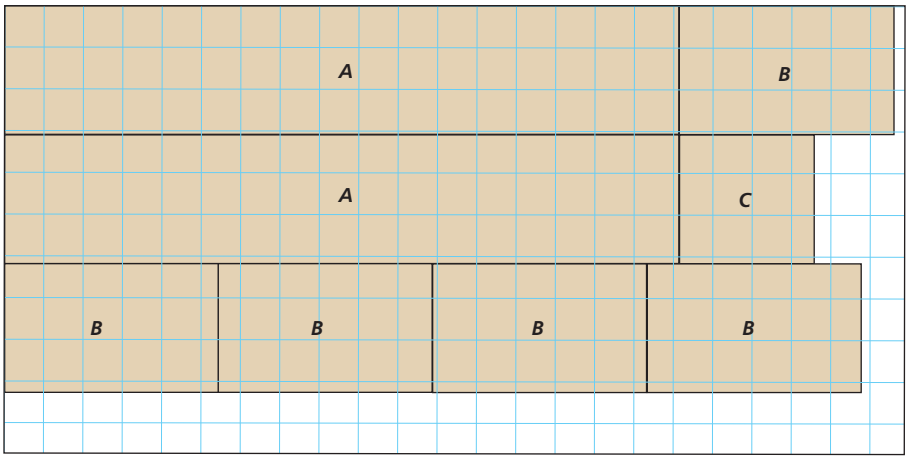

Make Your Own Cutting Diagram. For sheet goods, use graph paper or a drawing program on your computer to make a cutting diagram. Here, I've laid out the parts so I can rip the sheet along three lines before cutting the parts to length.

CHECK FOR UPDATES. There's one more thing I want to add. Before you start any project, it's a good idea to first contact the publisher of the plan. Sometimes there are revisions and updates that pop up, and you want to make sure you have the most up-to-date information on hand.

Before you turn on the saw to start cutting parts, there's another thing to point out. The parts list shows dimensions in an ideal world. It's best to thoroughly read through the project plan first and get an idea of what measurements are critical or most important. And, as tempting as it is, it's never a good idea to cut all of the workpieces in the parts list before you start assembling the project.

Let me explain why. On casework like a hutch, buffet, dresser, or kitchen cabinet, you'll typically start by making the sides, top, and bottom. You can cut these to the sizes shown. But after those parts are assembled, start taking measurements directly from the project. In my example, after the shell of a cabinet is assembled, everything inside (like shelves or dividers) is cut to fit.

In the end, the results are the same, but by taking each part one at a time, you end up with parts that fit together perfectly. If you've precut your parts and a cut is off as little as 1/32", it's likely to cause trouble down the road and lead to poorly fitting joints, not to mention frustration.

By taking the time to familiarize yourself with the project parts, hardware, and instructions on how the project goes together, you can save a lot of hassle later. In the end, the project will go together more smoothly and become something you can really be proud of. W

breaking down Sheet Goods

A great deal of furniture projects use some variety of hardwood veneer plywood. And many shop-built projects use other kinds of sheet goods, like MDF, in their construction. Whether it's plywood or MDF, the reasons for using sheet goods over standard lumber are numerous.

Plywood and MDF are generally more stable than glued-up boards for making large panels. And choosing sheet stock will typically be less expensive than using all solid lumber for an entire furniture or shop project.

Fortunately, most lumberyards and home centers have a large selection of sheet goods. But once you get these large sheets home, you'll need to break them down into more manageable pieces. (If you don't have the means to get them home, see the box at the bottom of the next page for an alternative.)

CIRCULAR SAW & STRAIGHTEDGE. One option many woodworkers turn to is using a circular saw and a straightedge (photos below) to rough cut their sheet goods into smaller pieces. These pieces can then be trimmed to final size with a table saw. While this is a reliable and time-tested method, it does require that you have solid and stable support under the entire sheet of plywood to make a safe and accurate cut.

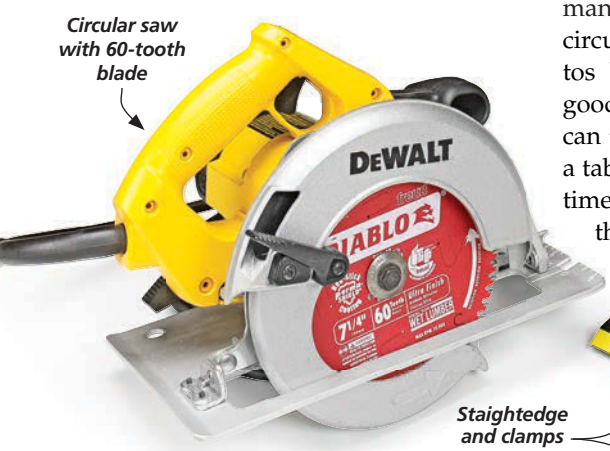

Circular saw with 60-tooth blade

Staightedge and clamps

Here's a look at three alternatives that provide proper support of the workpiece both during and after the cut. The one criterion all of these methods share is that the support structure is sacrificial. This means that the saw blade can safely cut into this support material while making the cut.

SAW BLADES. Even though I'm only rough cutting the sheet stock material at this point, I like to use a blade that will give me the cleanest cut possible. A blade with 60 teeth or more works best.

And always remember, when you're cutting with a hand-held circular saw, the blade's teeth enter the workpiece from underneath and exit at the top. It's where the teeth exit that you'll have the possibility of chipout and splintering. So when cutting plywood, be sure to place the good side down to get the best results.

FOAM INSULATION METHOD

Perhaps one of the easiest ways to support a sheet good is with the use of rigid foam insulation. The piece of insulation should be laid

▲ This shop-built straightedge guide works well for crosscutting. Trimming the edges of the foam leaves room for the clamps.

▲ When breaking down full sheets, be sure to use enough sawhorses so that the offcut and the main sheet are fully supported.

on the floor so that it doesn't sag in the middle, as shown in the photo at the top of the page. The circular saw blade should be set at a depth to cut through the sheet good and just into the insulation.

A full piece of rigid foam insulation is big enough to provide support under an entire sheet of plywood, including the cutoff. One tip when using this method is to trim a few inches off the edges of the insulation. This provides clearance to clamp a straightedge to the sheet good, as shown above.

There are, however, a few minor drawbacks to this method. To start, working at ground level isn't the most comfortable option. And the little bits of insulation kicked up by the saw blade make it a bit messy. Plus, it's not very convenient to store a large piece of insulation.

CUTTING ON SAWHORSES

If you'd prefer to raise the work up off the floor, then using sawhorses may be a good option for you (photo, upper right). An added bonus of this method is that you may be able to unload your sheet goods directly from a vehicle onto the sawhorses, eliminating excessive handling of the heavy sheets.

Just a few notes about using sawhorses for this task. If you're using steel sawhorses, be sure to add a sacrificial piece of "two-by" stock to the top. Also, to avoid damaging the veneered face of plywood, adding small strips of carpet to the tops is a good idea.

Finally, for full-size sheet goods, it's better to have four sawhorses for maximum support — both under the main piece and the offcut.

USING A KNOCK-DOWN TABLE

A simple upgrade to the saw horse method for breaking down sheet goods is to add a knock-down table (main photo, opposite page). A knock-down table is very easy to build and can be supported with just a couple of sawhorses.

Constructed from two-by stock, the knock-down table goes together easily using half-lap joints. It's best to size the table to support an entire 4′ x 8′ sheet. But best of all, the table comes apart quickly for easy storage. And when the pieces start to get chewed up from use, they're inexpensive to replace.

These methods for breaking down sheet goods are sure to make your workshop experience better. So the next time you're faced with this task, plan accordingly, and you're sure to get great results. W

How-To: CUT TO ORDER

▲ Most lumber retailers and home centers have a large panel saw to efficiently break down sheet goods on site. Having an accurate cut list in-hand makes the job much easier.

So what do you do if you don't have the means to transport large sheet goods home from the store? Or, you just don't like the hassle of handling and cutting down those large sheets? Fortunately, most home centers and lumberyards will be happy to take care of this task for you.

CUT FEES. If you decide to use this service, here a few things to keep in mind. Most retailers will make a small number of cuts for free. After that, they generally charge a very nominal per cut fee — $.50 per cut is typical.

KNOW YOUR SIZES. When you make your purchase, be sure to have an idea of the sizes of pieces you need. Having a cut list in hand is even better. This will help you avoid making a rushed decision and possibly having pieces cut too small.

CUT'EM BIG. Which leads to the final point — it's a good idea to get your workpieces cut oversize and then cut them to final size when you get them to your shop. A good rule of thumb is to have them cut ½" to ¾" oversize. Most lumberyards and home centers do a fine job cutting material, but the equipment may not always be calibrated correctly.

simple steps to a

Table Saw Tune-Up

As the workhorse of the shop, the table saw gets a lot of use and not a lot of thought when it's humming along and making smooth cuts. But problems can come up from time to time. The saw may start to vibrate and rattle when you turn it on, or cuts that used to be smooth start to bind or burn. That's when you know your saw needs a little TLC to get it back to working its best.

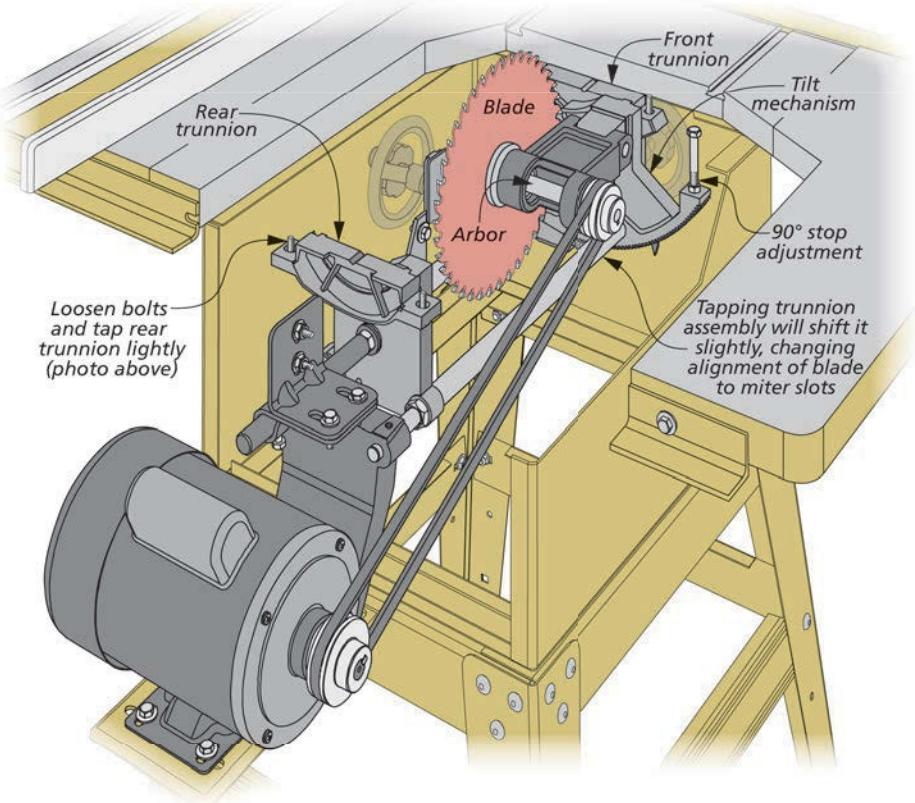

The goal, of course, is to do a little basic maintenance on your saw occasionally to prevent any of these problems in the first place. That's why I like to run through the following checklist to keep my table saw at peak performance. It's not difficult to do, and the peace of mind you get is certainly worth the extra time spent on tuning up your saw.

GIVE IT A GOOD CLEANING. The simplest thing you can do periodically is to give everything a good cleaning. I always start by vacuuming up as much loose sawdust as I can. I also use compressed air to blow out dust on both the inside and outside surfaces of the saw.

Then I turn the wheels, raising and tilting the blade fully to make sure everything is moving freely without binding. If anything sticks, chances are good that built-up sawdust or pitch inside the saw is the culprit.

To solve the problem, you don't need much. I just rely on *WD-40* or mineral spirits and a brass bristle brush to clean up any problem areas. Once everything is clean and turning smoothly, I apply a bit of paraffin wax to keep it that way.

ALIGN BLADE & MITER SLOT. After you have everything clean and operating

smoothly, it's time to start checking some of the adjustments on your saw. One of the most important factors for getting safe, accurate cuts is aligning the blade with the miter slot. There are several ways to check this alignment, but perhaps the most accurate option is to invest in a table saw gauge like the one shown at right (Sources, page 67).

This simple device features a runner that slides in the miter slot and a dial indicator that extends out toward the blade. The indicator checks the alignment of the blade in relation to the miter slot.

To see if the blade and slot are aligned, you'll need to check the slot alignment at the front and back of the blade (photo, above right). First raise the blade to full height and make a mark behind a tooth of the blade with a marker. Then rotate it to the front of the insert slot, and place the dial indicator against it. Zero out the dial indicator to establish a baseline measurement.

Now rotate the mark on the blade to the back, and slide the gauge back in the miter gauge slot to check it again. A little variation is okay, but you want the reading as close to zero as possible.

If the readings are different, you'll need to adjust the saw to bring the blade into alignment with the miter slot. On a contractor-style saw, this involves loosening the trunnions at the front and back of the saw and tapping them lightly to change the position of the blade. The photo and drawing on the opposite page show you how this works. On a cabinet saw, you often have to shift the position of the saw table (refer to your owner's manual for guidance).

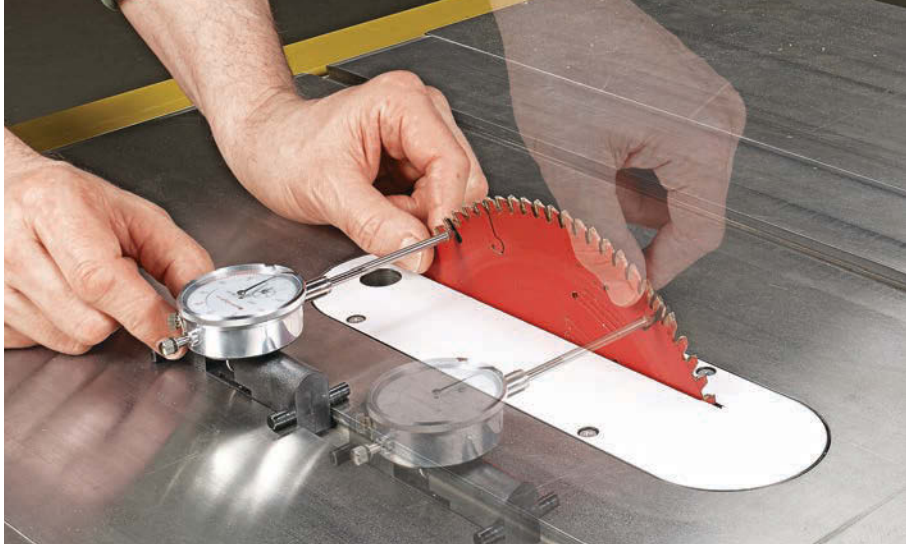

▲ A table saw gauge makes it easy to check the alignment of the blade with the miter slot. Mark a tooth with a marker, and set the gauge in the slot at the front of the blade near that tooth. Then move the marked tooth and gauge to the back to see if the gauge readings are the same.

▲ Check the alignment of the rip fence to a miter slot with a gauge (above). Then use a triangle to make sure the fence is square to the table (inset). This fence has set screws on the head for fine-tuning the settings.

ADJUSTING THE RIP FENCE. Now that the blade and the miter slot are aligned, you'll want to check the alignment of the rip fence, too. To start, use the table saw gauge to see how it lines up with a miter slot. The process is similar to checking the alignment of the blade (main photo above). Then make sure the fence is square to the table (inset photo). My fence had separate pairs of set screws on the head for adjusting both of these fence settings.

CHECK BLADE AT 45° & 90°. When it comes to tilting the blade of your table saw, you can't assume that the blade is set at 45° and 90° just because the scale on the front of the saw says it is. Most saws have adjustable stops at these two settings, but they can be bumped out of alignment with repeated movements.

To check the blade at 45° and 90°, first raise the blade to full height, and then check the settings as shown in the photos at left. Once the blade is set properly, you'll want to adjust the stops and scale cursors to match. Refer to your manual to see how to do this on your saw.

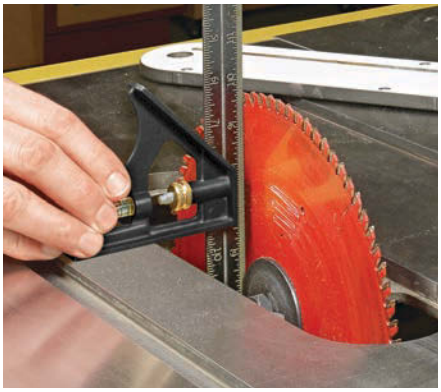

▲ To see if the blade is aligned at 90° to the table, place the rule of a combination square along its face. Make sure it's not touching any teeth for an accurate reading.

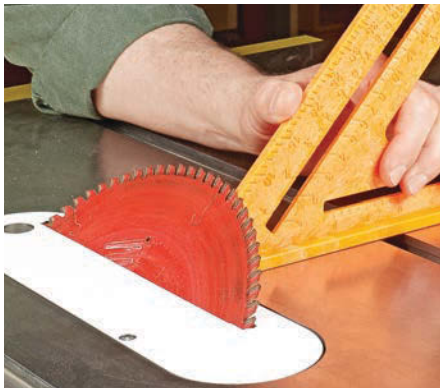

▲ A speed square or drafting triangle is useful for getting a quick check of the blade when at 45°. Here again, just make sure the square isn't touching the teeth of the blade.

More TUNE-UP TIPS

With the basic components of the table saw aligned, you can turn your attention to checking and correcting some of the auxiliary items. These include the miter gauge and the blade guard, splitter, and/or riving knife.

TAKE CARE OF THE MITER GAUGE. Just as with the blade tilt settings that you checked earlier, the miter gauge should also have stops that set the gauge at 90° and 45° to the blade. Once again, these often slip out of alignment with constant use.

The best tool to use for setting the alignment of the miter gauge properly is a drafting triangle. Just loosen the miter gauge, and check the 90° edge of the triangle against the blade, as shown in the upper right photo. Then set the miter gauge stop for 90° at this position.

The process is much the same for setting the miter gauge at 45°. Just use the other side of the triangle to check the setting, as shown in the photo at right.

When I think the gauge is set up properly, I do one more test to make sure. I crosscut a piece at 90°, flip over the cutoff, and butt the two pieces together to check for gaps. If there aren't any, then you know the gauge is set properly. You can test the 45° setting by mitering a piece and then butting the pieces together against a square.

SET UP THE SPLITTER/RIVING KNIFE. The blade guard, splitter, and/or riving knife setup will vary based on the saw you have, but two things are consistent for setting them up. First, the splitter or riving knife should be square to the saw table (if the blade is). This is easy to check with a triangle or small square. There's usually a bracket at the back of the saw that you can adjust if needed (photo below).

▲ A drafting triangle (refer to Sources, page 67) is a simple tool to use for checking the settings of the miter gauge at 90° (upper photo) and 45° (lower photo). Most gauges have a small adjustment screw at the back for locking in the settings once they're correct (inset photos).

▲ Set a couple of straightedges against the body of the blade in order to bring the splitter in line with the blade.

▲ Many saws have an adjustable bracket at the back that allows you to fine-tune the position of the splitter.

To check the alignment of the splitter or knife with the blade, you can use a pair of straightedges as shown in the photo, below left. There are two schools of thought on how the blade should be aligned with the splitter. Some feel that the face of the splitter should be flush with the side of the blade facing the rip fence for the most accurate cuts. Personally, I like to center the splitter with the body of the blade. That way, the setting doesn't need to change if I cut on the other side of the blade or if I change to a different saw blade.

ALIGN THE PULLEYS. The next item you'll want to check is the alignment of the pulleys on the arbor and on the motor of the saw. If these two pulleys are out of alignment, it can cause the saw to vibrate, which leads to premature belt wear. Fortunately, this issue is pretty easy to both check and correct if necessary.

You want the faces of the pulleys to be parallel and in the same plane with one another. You can check this by placing a straightedge across the two faces of the pulleys (drawing on the opposite page).

If the straightedge touches both pulleys across their entire faces, then they're aligned properly. If there's a gap, however, you'll need to adjust the position of one of the pulleys to bring it into alignment with the other one. This adjustment might require sliding the pulley on its shaft or adjusting the position of the motor, depending on your saw.

CONSIDER UPGRADES. If the saw still vibrates despite these adjustments, you may want to consider upgrading the belt and pulleys on your saw. Many pulleys that are factory-installed on table saws are die-cast versions. By replacing them with higher-quality machined steel pulleys, like those shown in the box below, you can reduce vibration.

The drive belt is another area for considering an upgrade. Over time, a standard V-belt can develop a memory, where it stays tight in the area that rests on the pulley. A higher-end link belt (box below) doesn't have this problem, and it often runs smoother with less vibration.

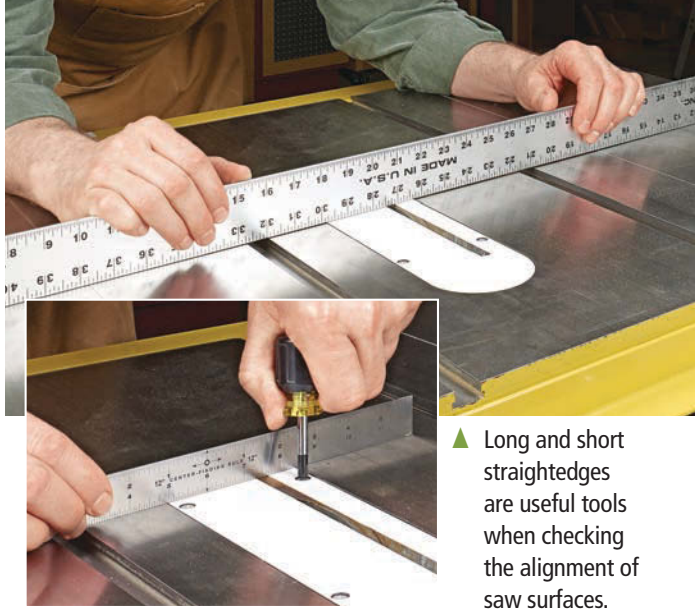

▲ Long and short straightedges are useful tools when checking the alignment of saw surfaces.

GET IT LEVEL. You're now on the home stretch for your table saw tune-up. The last thing you'll want to check is that all the surfaces of your saw are level and flush with one another. This is an important consideration, as you don't want a workpiece to catch or drag on an uneven surface as you're making a cut.

Here again, I like to get out my long straightedge and check the alignment of both wings of the saw with the saw table (photo, above right). You can adjust the position of the wings using the bolts driven through the wings and into the saw table.

The throat insert around the blade is another surface that should be flush with the saw table. As you can see in the inset photo above, many inserts have four set screws that you can adjust to bring the insert flush with the table.

While I'm focused on the saw table, I usually polish up and protect the table as the final step of my tune-up. If you do this regularly, it's a pretty simple process. For any glue or pitch on the saw table surface, a few strokes with some #0000 steel wool should take care of things. After wiping the table clean with a dry rag, I spray the entire surface with a protectant such as *Bostik GlideCote*.

THE TUNED-UP SAW ADVANTAGE. As with most things in life, preventive maintenance is the best approach with your table saw. By running through these steps occasionally, you should be able to catch problems before they impact your saw's performance. And once you tune up your saw properly, you'll likely notice the difference. It will run more smoothly, and cuts will be cleaner and more accurate, as well. Plus, it can make an old table saw work like new again. And who doesn't like having a new tool in their shop? W

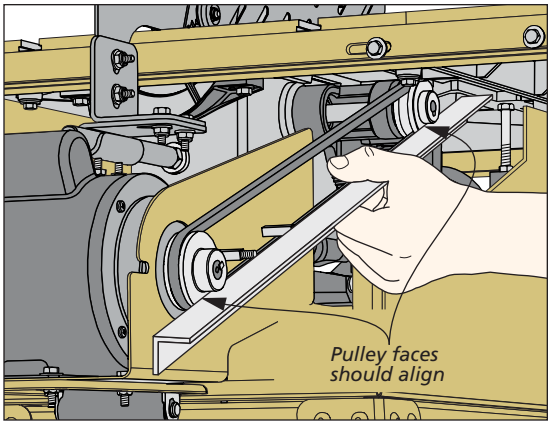

Align the Pulleys. A piece of aluminum angle makes a good straightedge to help align the pulley on the motor with the pulley on the saw arbor.

Worth a Look: BELT & PULLEY UPGRADE

▲ A link belt and higher-quality machined steel pulleys are two upgrades you may want to consider if your saw is vibrating or rattling in use. You can find where I purchased these items in Sources on page 67.

▲ Machined steel pulleys tend to run more smoothly than standard die-cast versions, and a link belt is easy to customize in length to fit your model of saw.

tips from our shop

Shop Notes

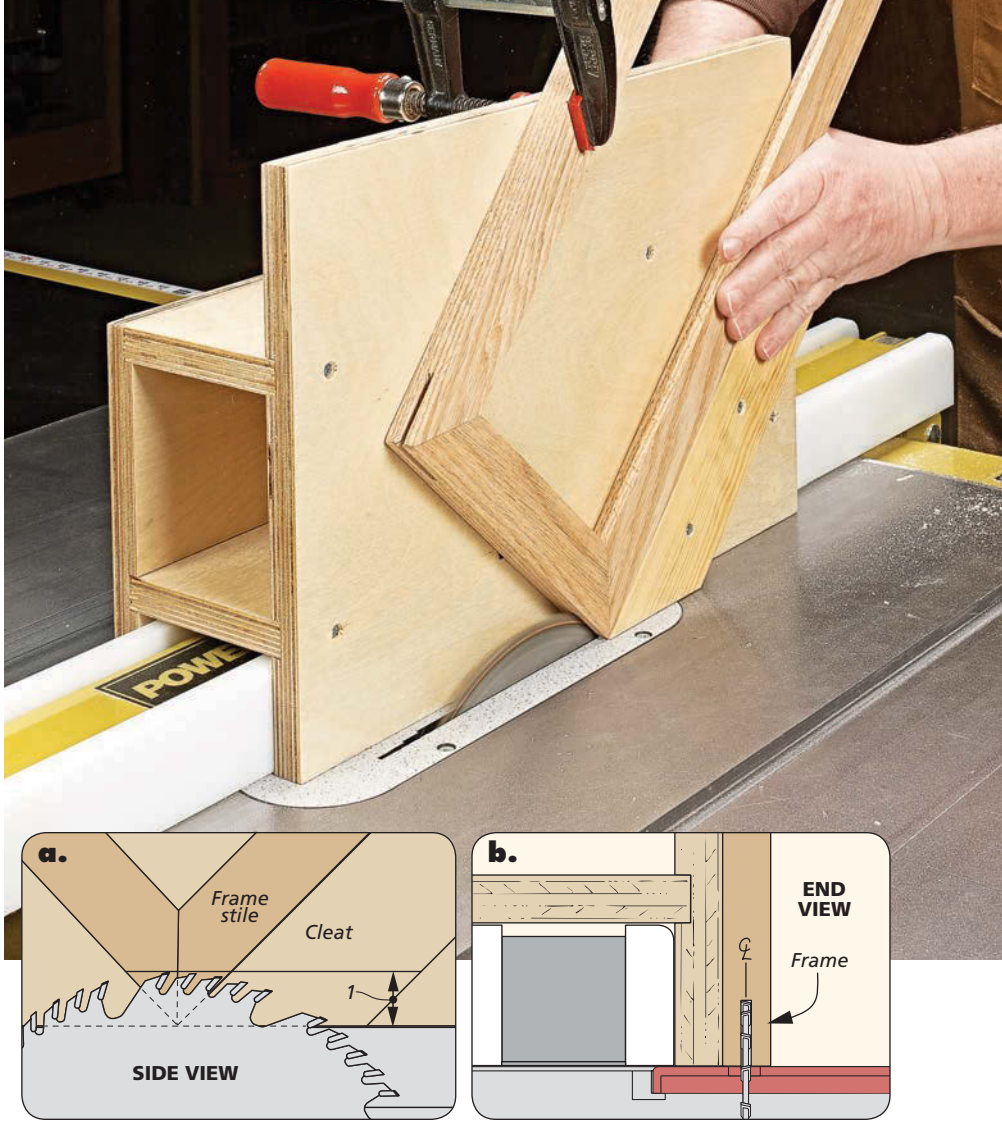

Splined Miter Jig

The hall tree on page 16 features a mirror frame joined with miters at the corners. I wanted the mirror to hold up over time, so I reinforced the miter joints with hardwood splines.

Adding the splines requires cutting kerfs in the corners of the frame after it's assembled. To do that quickly and accurately, I built the table saw spline jig shown in the photo at right.

JIG DETAILS. The jig assembly is pretty straightforward. It features a tall front fence to support the frame during the cut, and spacers and a back fence that are sized to straddle the table saw's rip fence. A cleat cut at 45° holds the frame at the proper position while you cut the kerfs. (On page 23, you'll note that the mirror frame is actually mitered at 44° and 46°, but that's okay. The difference in the kerf lengths is so slight that it's difficult to notice.)

BUILDING THE JIG. As you're cutting out the parts for your jig (refer to the drawings below), pay close attention to the width of the spacers. You may need to adjust this dimension to fit your rip fence. You want the assembly to slide smoothly without binding but also without racking from side to side.

Once the parts are cut, you can cut the dadoes in the fence parts. Then put it all together with glue and screws. Just make sure to position the screws in the cleat high enough up so they won't come in contact with the saw blade.

CUTTING THE KERFS. Since the mitered frame for this project doesn't have perfect 45° miters, the key to making the cuts is to always have the frame stiles (the long edges) against the cleat as you're cutting the kerfs. It's also a good idea to clamp it in position, so it doesn't shift while you're cutting (photo above).

Other than that, it's a matter of setting the blade height (detail 'a') and then adjusting the rip fence to center the kerf (detail 'b'). After you cut a kerf, flip the frame and repeat the process. Then add the splines, as explained on page 23.

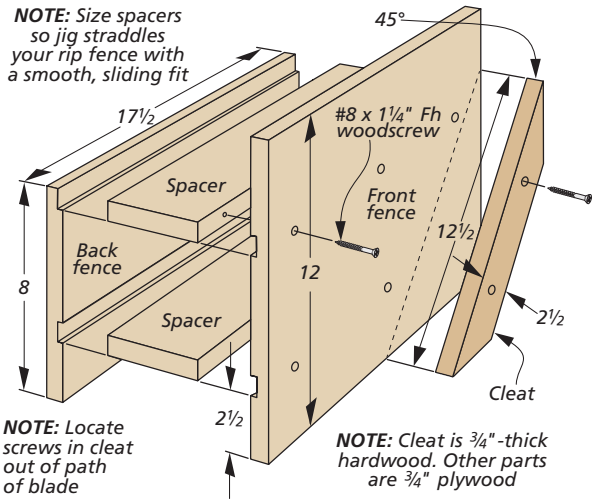

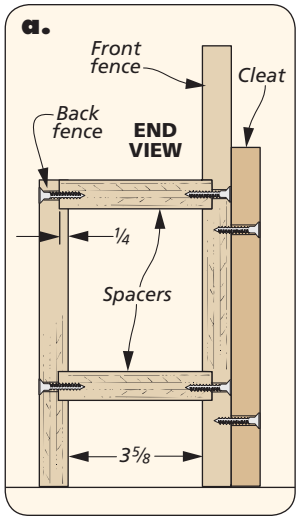

Dowel Hole Drilling Guides

The beveled legs of the hall tree present some interesting challenges. For example, though the legs and slat rails meet at a 2° angle, they are joined with dowels that are installed parallel with the floor. This simplifies construction of the hall tree, but it makes drilling the holes a bit of a head-scratcher.

ANGLED DRILLING GUIDES. The solution to this problem is shown in the two drawings at right. Figure 1 shows the thicker drilling guide for drilling dowel holes in the legs. It features a 2° bevel on one side of the guide block, so it helps you drill holes that are parallel with the floor.

The second guide (Figure 2) is for drilling holes in the slat rails. It's similar but made from thinner stock to match the slat rails. With both guides, you simply drill centered holes at the drill press before beveling one side of the block at 88°. Then glue the blocks to a hardboard fence. Refer to pages 18 and 21 to use the guides.

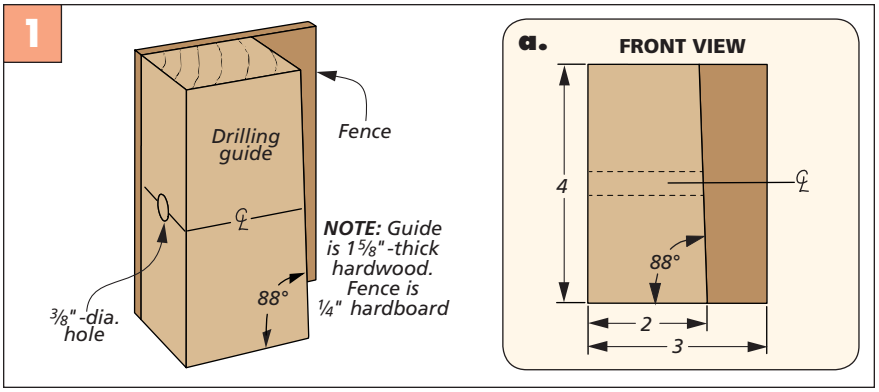

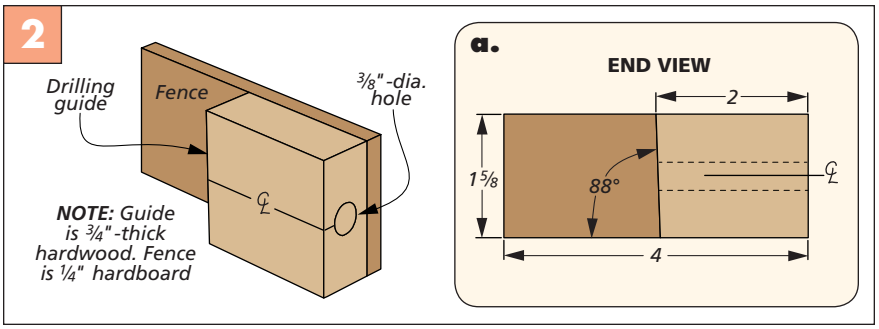

Corner Drilling Guide

There's one other drilling guide needed to build the hall tree, and this one is a bit more complicated than the other two. It's used to drill holes in the corners of the legs that are needed to secure the shelves and top with screws.

As you can see in the drawings on the right, the guide is just a block with 45° miter cut on one corner and a notch cut on the opposite corner to fit over the leg. Of course, because the legs taper upward at 2°, each face of this notch also needs to be cut at 2° in order to drill holes that are parallel with the floor.

I started by trimming the 45° corner on a longer piece and then crosscutting the guide square. Then it's time to cut the tapered notch. The setup is very similar to how you'll cut the shelves in the hall tree project itself. Figure 1 below provides the details. The key is to support the block with a miter gauge auxiliary fence and tilt the miter gauge 2° to cut one shoulder of the notch (detail 'a'). Then, move the miter gauge to the other miter slot, angle the gauge 2° in the opposite direction, and complete the notch (detail 'b'). Just make sure to use a clamp to hold the block during these cuts to keep your hands safely away from the blade.

Once the notch is completed, you can drill the centered hole in the guide as shown in Figure 2 below. The details of using the guide to drill holes in the legs of the hall tree are shown in a drawing at the bottom of page 18.

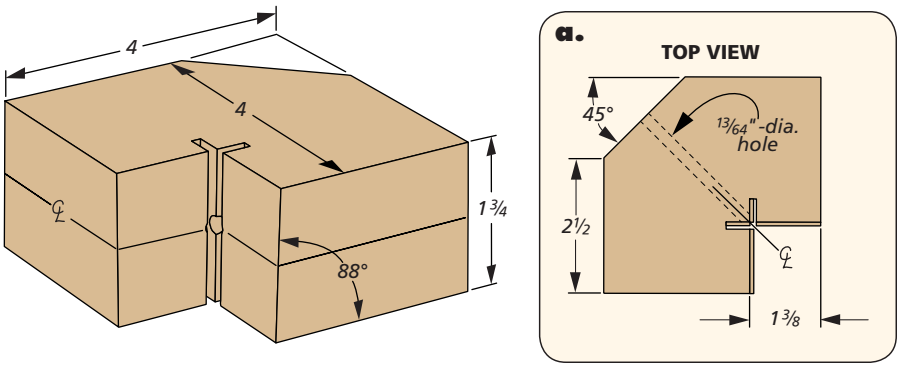

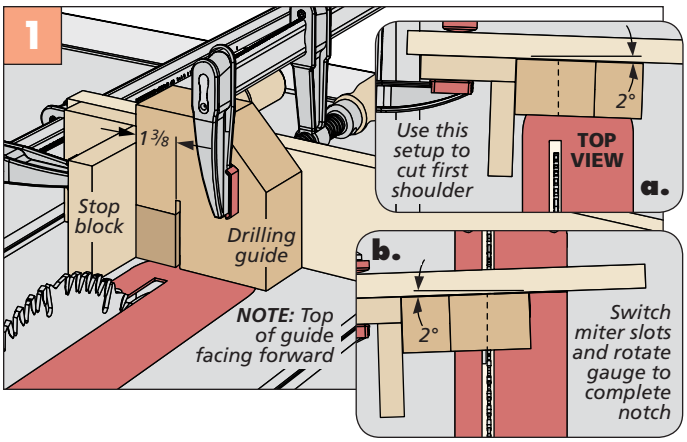

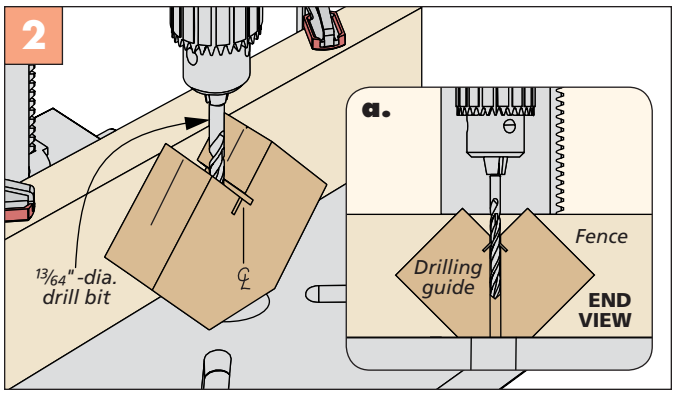

Mortise Routing Jig

The sides and top of the gentleman's dresser (page 38) are assembled with screws through mortises. To ensure the sizing of the mortises was consistent, I used the router jig shown at right.

The two-part base and a pair of spacers form an opening for a pattern bit. (See Sources on the opposite page for the bit I used.) The width of the opening matches the diameter of the bearing on the bit. The bit should slide smoothly in the slot without moving from side to side. The distance between the spacers determines the overall length of the mortise.

For all of the mortises except the two near the front edge of the top, clamp the jig to the workpiece with the narrow cleat securely against the edge. Use a plunge router to make a couple of passes to reach the final depth (detail 'a'). For the two front mortises on the top, flip the jig over so the wide cleat butts against the edge.

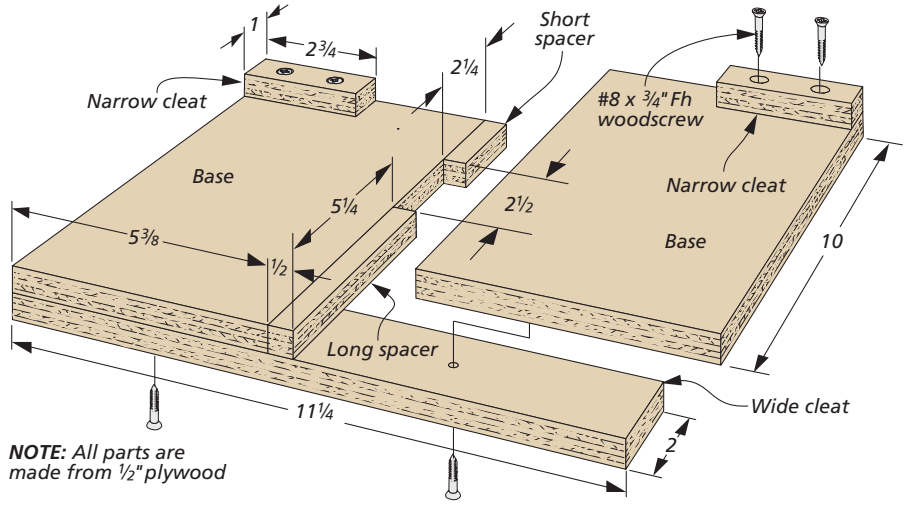

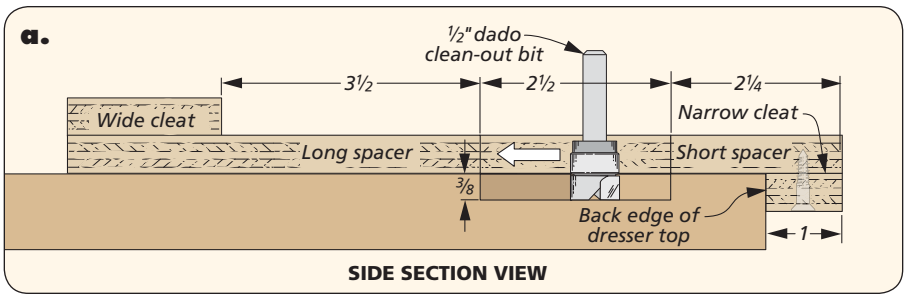

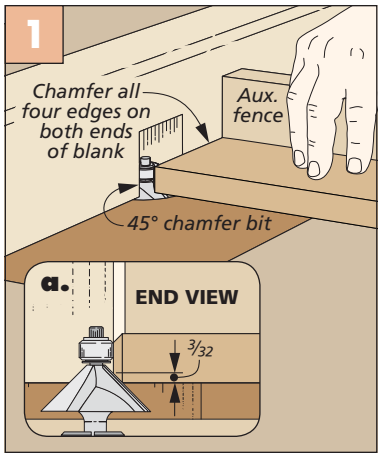

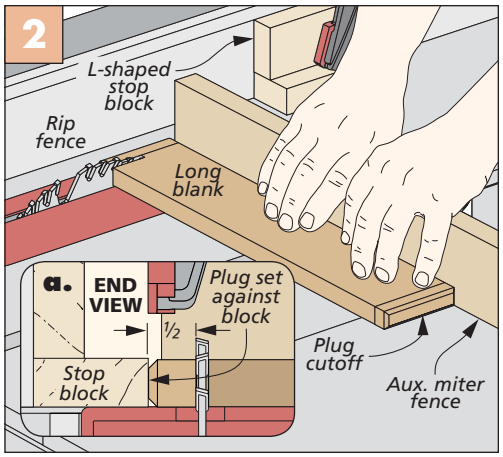

Chamfer Mortise Plugs

The mortises in the gentleman's dresser are plugged with faux tenons. These small pieces are cut from end grain. To chamfer them and cut them to length, I used the techniques shown on the left.

First, I planed a long blank to thickness to match the width of the mortise. Rip the blank to width to match the mortise length. Use a chamfer bit at the router table to rout all four edges at each end of the blank. Then set up a stop block on the table saw to cut off the plugs, and repeat the process for the remaining plugs.

Stopped Dado Jig

The gentleman's dresser features stopped dadoes to assemble some of the case components. The router jig shown at right makes cutting the dadoes foolproof.

The jig is simple to make. It consists of two fences and a pair of cleats. The fences are spaced to trap your router's base between them yet allow it to slide smoothly. This helps ensure a straight cut when routing the dadoes.

Using the jig is fairly straightforward. After laying out the centerline and ends of the mortise, center the jig over the layout lines. Clamp it in place with a cleat against the edge of the workpiece. Rout to the layout line (Figure 1). W

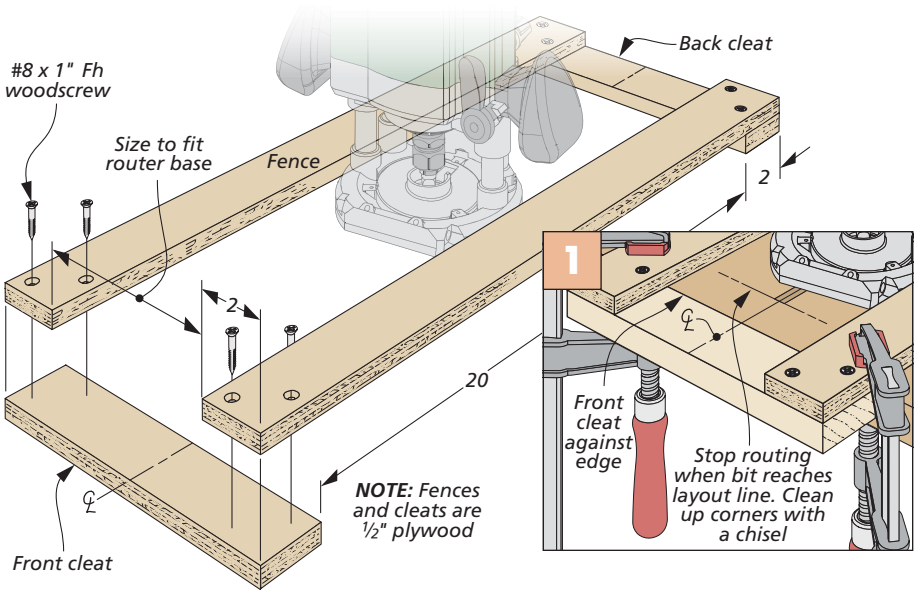

hardware & supplies
Sources

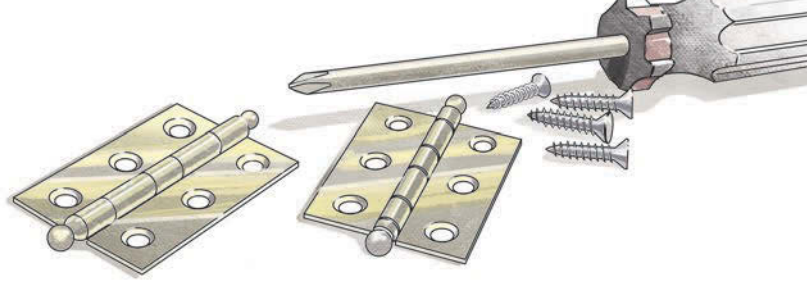

Most of the materials and supplies you'll need to build the projects are available at hardware stores or home centers. For specific products or hard-to-find items, take a look at the sources listed here. You'll find each part number listed by the company name. See the right margin for contact information.

FROM OUR READERS *(p.4)*

- **Lee Valley**
  4" Storage Tubes 27K60.11
- **Amazon**
  Roller Bearings . . . B009KASQZW

BRUSHLESS MOTORS *(p.10)*

Tools with brushless motors are made by manufacturers such as *DeWalt*, *Milwaukee*, *Rockwell*, *Makita*, *Bosch*, and others. They are available at hardware stores, home centers, and online retailers.

READY2ROUT SYSTEM *(p.14)*

- **Rockler**
  Ready2Rout Fence 44999
  Ready2Lift 57766
  Touch-Screen Controller . . . 58808
- **Lee Valley**
  Ready2Rout Fence 17N15.05

You can purchase the *Ready2Rout* system and additional accessories directly from the manufacturer, *Next Wave Automation.*

HALL TREE *(p.16)*

- **Lee Valley**
  50mm Hex Screws 00W65.03
  Bronze Hooks 00W86.51
  Mirror Fittings 00K62.01
- **Grignon's Art and Frame**
  ⅛" Offset Clips 1311G

The mirror glass was purchased from a local glass shop. The hall tree was stained with *General Finishes' Pecan* oil stain and sprayed with two coats of lacquer.

SWIVEL VISE *(p.24)*

- **McMaster-Carr**
  Hitch Ball 8785T6
  Adjustable Handle 6270K52
- **Amazon**
  4" Mechanics Vise 4935504
  Pipe Flange B000BO4HVI
- **MetalsDepot**
  Steel Bar F214212

The hardwood parts of the swivel vise were finished with two coats of spray lacquer.

HOBBY BENCH *(p.28)*

- **Lee Valley**
  Bench Bolts 05G07.02
  1¼"-dia. Knobs 02W14.24
- **Rockler**
  Bench Casters 43501
  ¼" Shelf Supports 33860

The workbench was finished with several coats of *General Finishes Arm-R-Seal* wipe-on varnish.

GENTLEMAN'S DRESSER *(p.38)*

- **Rockler**
  Ring Pulls 1008747
  Bail Pulls 1008515
  No-Mortise Hinges 28704
  ¼" Shelf Supports 33902
  Stem Bumpers 28373
  Ball Catches 28613
- **Glass Crafters**
  Black Opal Glass S10-1009W
- **Rust-Oleum**
  Gunstock Stain 211728H
- **Amana Tool**
  Dado Cleanout Bit 45460-S

The dresser was stained with *Varathane Gunstock* stain (made by *Rust-Oleum*). Then it was sprayed with two coats of lacquer.

ORBITAL SANDERS *(p.52)*

- **Amazon**
  Makita 5" Sander B05030
- **Rockler**
  Bosch 6" Sander 58953

TABLE SAW TUNE-UP *(p.62)*

- **Rockler**
  45°-90°-45° Triangle 33486
  Table Saw Gauge 23139
  Bostik GlideCote 97594
- **Highland Woodworking**
  Link Belts 485401
  Machined Steel Pulleys . . . varies

Get the all-new *Woodsmith* Magazine Library DVD! It contains every page of our first 216 issues. The DVD is fully searchable and printer-friendly. Plus, you get online access to every issue, as well. Learn more at *Woodsmith.com*!

Magazine Library DVD: $99

MAIL ORDER SOURCES

Project supplies may be ordered from the following companies:

Woodsmith Store
800-444-7527

Rockler
800-279-4441
rockler.com

Amana Tool
800-445-0077
amanatool.com

amazon.com

General Finishes
generalfinishes.com

Glass Crafters
800-422-4552
glasscrafters.biz

Grignon's Art and Frame
207-487-2754
grignonsart.com

Highland Woodworking
800-241-6748
highlandwoodworking.com

Lee Valley
800.871.8158
leevalley.com

MetalsDepot
859-745-2650
metalsdepot.com

McMaster-Carr
630-833-0300
mcmaster.com

Next Wave Automation
419-491-4520
nextwaveautomation.com

Rust-Oleum
800-901-0411
rustoleum.com

looking inside
Final Details

▲ *Gentleman's Dresser.* This handsome cabinet has several Craftsman-style details, from the hardware and decorative grids, to the solid quartersawn oak construction. Turn to page 38 to see how it's all done.

▲ *Hall Tree.* Gracefully tapering sides give this hall tree a stylish appearance. A swiveling mirror, catch-all shelf, and umbrella storage make it functional, as well. Complete plans start on page 16.

▲ *Shop Projects.* This issue features two practical but out-of-the-ordinary shop projects. On page 28, you'll find a compact bench (left) that's perfect for just about any hobby or craft. And the multi-function vise (above) can be built in a weekend by following the plans beginning on page 24.